THE OAKS AT SHADY CREEK, PHASE 2

CONSTRUCTION DOCUMENTS

SECTION 17, TOWNSHIP 31 S, RANGE 20 E
HILLSBOROUGH COUNTY, FLORIDA

PARCEL ID#'s

U-17-31-20-ZZZ-000003-15060.0
U-17-31-20-ZZZ-000003-14911.1

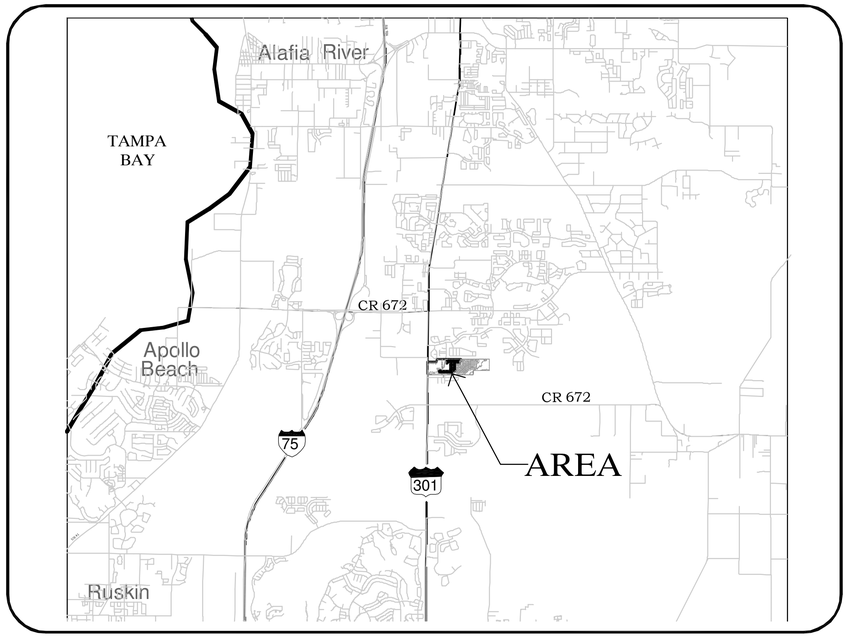

LOCATION MAP

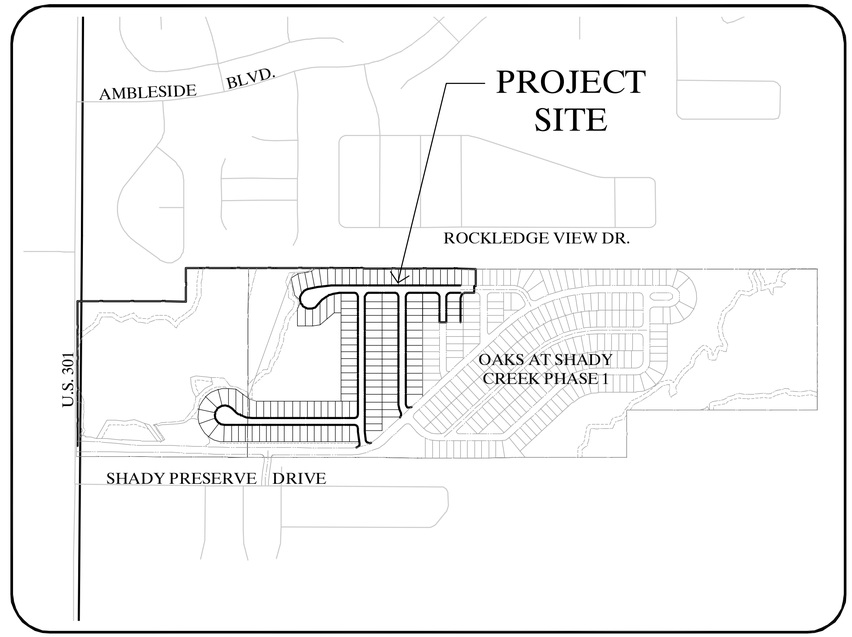

VICINITY MAP

SWFWMD SUBMITTAL	SWFWMD SUBMITTAL	COUNTY/CITY SUBMITTAL	DRAWING INDEX	
			SHEET NUMBER	SHEET TITLE
*	*	*	C1.01	COVER SHEET
*	*	*	C1.02-C1.03	NOTES AND LEGENDS
*		*	C1.04	CONSTRUCTION POLLUTION PREVENTION PLAN
*		*	C2.00	LIMITS OF CONSTRUCTION PLAN
		*	C3.01-C3.04	SIGNING, PAVEMENT MARKING AND DIMENSION PLAN
*		*	C4.01-C4.04	PAVING, GRADING AND DRAINAGE PLAN
*		*	C4.05	OVERALL DRAINAGE MAP
	*	*	C5.01-C5.04	SANITARY SEWER AND WATER DISTRIBUTION PLAN
	*	*	C6.01-C6.03	PROFILE
*		*	C7.01	TYPICAL SECTIONS AND DETAILS
*		*	C8.01	EROSION CONTROL DETAILS
*		*	C9.01	GRADING DETAILS & WETLAND ENHANCEMENT PLANTING DETAILS
*		*	C10.01	STORM SEWER DETAILS
	*	*	C11.01-C11.02	WATER DISTRIBUTION DETAILS
	*	*	C12.01	SANITARY SEWER DETAILS
		*	L1.01-L1.04	STREET TREE PLAN
		*	IR1.01-IR1.04	CODE IRRIGATION PLAN

FOR:

LENNAR HOMES, LLC

4600 WEST CYPRESS ST., SUITE 200
TAMPA, FL 33607

Permit Type	Permit No.	Status
A.C.O.E.	SAJ-2005-00564 (LDD)	PREVIOUSLY APPROVED
S.W.F.W.M.D.	43028239.003 43028239.XXX MOD	PREVIOUSLY APPROVED X
F.D.E.P. (Water)	X	X
F.D.E.P. (Sewer)	X	X
N.P.D.E.S.	X	X
HILLSBOROUGH COUNTY	PI # 2580	RE SUBMITTAL 1-29-2015

BY:

King ENGINEERING ASSOCIATES, INC.
4921 Memorial Highway
One Memorial Center, Suite 300
Tampa, Florida 33634
Phone 813 880-8881
Fax 813 880-8882
www.kingengineering.com
Engineering License #2610

NO.	DATE	DESCRIPTION	APP'D BY

TUYEN L. TRAN
FEB. 11, 2015
FL P.E. NO. 54099

JOB NO. 5163-905-000
DATE: 10/28/2014
SCALE: AS SHOWN
SHEET NO. C1.01
HC FINAL SET
FEB. 11, 2015

Q:\CIVIL\5163\905\000\Production\Drawings\COVER.dwg , February 11, 2015 10:30 AM , King Engineering Associate Inc.

© COPYRIGHT 2012 KING ENGINEERING ASSOCIATES, INC. DRAWINGS AND CONCEPTS MAY NOT BE USED OR REPRODUCED WITHOUT WRITTEN PERMISSION CONSENT IS HEREBY GRANTED SPECIFICALLY TO GOVERNMENTAL AGENCIES TO REPRODUCE THIS DOCUMENT IN COMPLIANCE WITH F.S. CHAPTER 119.

GENERAL NOTES

1. ALL PRACTICABLE AND NECESSARY EFFORT SHALL BE TAKEN DURING CONSTRUCTION TO CONTROL AND PREVENT EROSION AND TRANSPORT OF SEDIMENT MATERIAL TO INLETS, SURFACE DRAINS, WETLANDS AND LAKE AREAS. THE CONTRACTOR SHALL BE RESPONSIBLE FOR ALL RESTORATION EFFORTS THAT MAY BE REQUIRED.
2. THE CONTRACTOR IS TO CONTROL ALL FUGITIVE DUST ORIGINATING ON THIS PROJECT BY WATERING OR OTHER METHODS AS REQUIRED.
3. THE CONTRACTOR SHALL NOT ENTER UPON OR IN ANY WAY ALTER THE WETLAND CONSERVATION AREAS THAT ARE DESIGNATED TO REMAIN. ALL WORK IN THE VICINITY OF OPEN WATER AND/OR WETLANDS IS TO BE PERFORMED IN COMPLIANCE WITH THE ENVIRONMENTAL PERMITS FOR THE SITE. THE CONTRACTOR WILL BE RESPONSIBLE FOR ANY FINE RESULTING FROM HIS VIOLATION OF PERMIT CONDITIONS.
4. SPECIAL CARE SHALL BE TAKEN TO ENSURE THAT EXISTING TREES TO BE SAVED REMAIN UNDAMAGED DURING CONSTRUCTION. REFERENCE LANDSCAPE AND LAND ALTERATION ORDINANCE.
5. PRIOR TO BEGINNING WORK, THE CONTRACTOR SHALL EXPOSE ALL EXISTING UTILITIES TO BE EXTENDED OR CROSSED AND CONTACT THE ENGINEER AT (813) 880-8881 FOR RESOLUTION OF ANY CONFLICTS BETWEEN FIELD CONDITIONS AND CONSTRUCTION DOCUMENTS.
6. IT IS THE ENGINEER OF RECORD RESPONSIBILITY TO FIELD LOCATE ALL VISIBLE UTILITIES AND IT IS THE CONTRACTOR'S RESPONSIBILITY TO DETERMINE THE EXACT LOCATION OF THE UNDERGROUND UTILITIES PRIOR TO CONSTRUCTION IN THEIR VICINITY. THE CONTRACTOR SHALL NOTIFY "SUNSHINE" (1-800-432-4770) AND ALL UTILITY COMPANIES IN THE AREA 5 DAYS IN ADVANCE OF BEGINNING CONSTRUCTION.
7. CONTRACTOR TO REMOVE AND DISPOSE OF ALL EXISTING OCCUPATION AS NECESSARY TO CONSTRUCT THE PROPOSED IMPROVEMENTS. THE OWNER RETAINS THE RIGHT TO KEEP ANY OCCUPATION DEEMED VALUABLE.
8. DIGITAL OR ELECTRONIC REPRESENTATION OF THESE CONSTRUCTION PLANS DOES NOT CONSTITUTE A COORDINATE CONTROL MAP OR MATHEMATICALLY CONTROLLED INFORMATION FOR THE USE OF CONSTRUCTION STAKEOUT. IT IS THE RESPONSIBILITY OF THE CONTRACTOR AND/OR CONTRACTOR'S SURVEYOR TO ENSURE THAT ANY DIGITAL OR ELECTRONIC REPRESENTATION OF THESE PLANS IS IN COMPLETE CONFORMANCE WITH ALL OF THE NOTATIONS, SPECIFICATIONS, DETAILS AND OTHER DATA APPEARING ON OR AS MAY BE DERIVED FROM THESE CONSTRUCTION PLANS.
9. CONTRACTOR IS RESPONSIBLE FOR PREPARING AND IMPLEMENTING MAINTENANCE OF TRAFFIC PLANS AS REQUIRED.
10. EXISTING WELL(S) WITHIN THE LIMITS OF DISTURBANCE SHALL BE SEALED AND ABANDONED BY A LICENSED WELL CONTRACTOR IN ACCORDANCE WITH RULE 40D-3.531. OWNER RESERVES THE RIGHT TO TRANSFER ANY EXISTING WATER USE RIGHTS TO OTHER EXISTING OR PROPOSED WELL(S).
11. CONTRACTOR RESPONSIBLE FOR REPAIR AND REPLACEMENT OF INFRASTRUCTURE / FACILITIES WITHIN R/W THAT ARE DAMAGED DURING CONSTRUCTION ACTIVITY.
12. ALL MATERIALS AND CONSTRUCTION SHALL BE IN ACCORDANCE WITH HILLSBOROUGH COUNTY STANDARDS AND SPECIFICATIONS.
13. THE WETLAND CONSERVATION AREA SHALL BE RETAINED IN A NATURAL STATE PURSUANT TO THE HILLSBOROUGH COUNTY LAND DEVELOPMENT CODE (LDC) AS AMENDED; THE HILLSBOROUGH COUNTY ENVIRONMENTAL PROTECTION ACT, CHAPTER 84-446; AND CHAPTER 1-11, RULES OF THE HILLSBOROUGH COUNTY ENVIRONMENTAL PROTECTION COMMISSION. IN ADDITION, A 30 FOOT SETBACK FROM THE WETLAND CONSERVATION AREA IS REQUIRED AND SHALL CONFORM TO THE PROVISIONS STIPULATED WITHIN THE HILLSBOROUGH COUNTY LAND DEVELOPMENT CODE.

KING'S SURVEYOR'S NOTES

1. TYPE OF SURVEY: BOUNDARY SURVEY. ANY USE OF THIS SURVEY FOR PURPOSES OTHER THAN WHICH IT WAS INTENDED, WITHOUT WRITTEN VERIFICATION, WILL BE AT THE USER'S SOLE RISK AND WITHOUT LIABILITY TO THE SURVEYOR. NOTHING HEREIN SHALL BE CONSTRUED TO GIVE ANY RIGHTS OR BENEFITS TO ANYONE OTHER THAN THOSE CERTIFIED TO.

2. THIS SURVEY WAS PREPARED WITH THE BENEFIT OF A COMMITMENT FOR TITLE INSURANCE PREPARED BY FIDELITY NATIONAL TITLE INSURANCE COMPANY, ORDER NUMBER 4437221, EFFECTIVE DATE JUNE 19, 2013 AT 8:00 AM. (SEE SCHEDULE B SECTION II NOTES, THIS SHEET)

3. NO INSTRUMENTS OF RECORD REFLECTING EASEMENTS, RIGHTS-OF-WAY, AND/OR OWNERSHIP WERE FURNISHED TO OR PURSUED BY THE UNDERSIGNED OTHER THAN THOSE SHOWN HEREON. EASEMENTS OR RESTRICTIONS OF RECORD OTHER THAN THOSE SHOWN HEREON MAY EXIST.

4. NO EXCAVATION WAS PERFORMED TO VERIFY THE LOCATION OR EXISTENCE OF ANY UNDERGROUND IMPROVEMENTS, STRUCTURES, OR FOUNDATIONS. UNDERGROUND UTILITIES SHOWN HEREON ARE SHOWN PER ABOVE GROUND EVIDENCE AND/OR RECORD DRAWINGS OR MUNICIPAL ATLAS INFORMATION AND THE LOCATION OF ALL UNDERGROUND UTILITY LINES ARE APPROXIMATE ONLY. THIS DOCUMENT SHOULD NOT BE RELIED UPON FOR EXCAVATION OR CRITICAL DESIGN FUNCTIONS WITHOUT FIELD VERIFICATION OF UNDERGROUND UTILITY LOCATIONS. UTILITIES OTHER THAN THOSE SHOWN HEREON MAY EXIST.

5. THE SURVEY DEPICTED HEREON IS NOT INTENDED TO SHOW THE LOCATION OR EXISTENCE OF ANY WETLAND OR JURISDICTIONAL AREAS, OR AREAS OF PROTECTED SPECIES OF VEGETATION EITHER NATURAL OR CULTIVATED.

6. UNLESS IT BEARS THE SIGNATURE AND THE ORIGINAL RAISED SEAL OF A FLORIDA LICENSED SURVEYOR AND MAPPER THIS DRAWING, SKETCH, PLAT OR MAP IS FOR INFORMATIONAL PURPOSES ONLY AND IS NOT VALID.

7. ADDITIONS OR DELETIONS TO SURVEY MAPS OR REPORTS BY OTHER THAN THE SIGNING PARTY OR PARTIES IS PROHIBITED WITHOUT WRITTEN CONSENT OF THE SIGNING PARTY OR PARTIES.

8. ADJOINING PROPERTY OWNERS SHOWN HEREON ARE BASED ON INFORMATION OBTAINED FROM THE COUNTY PROPERTY APPRAISER WEB SITE AND IS FOR INFORMATIONAL PURPOSES ONLY.

9. BEARINGS SHOWN HEREON, AND QUALIFIED AS (M) FOR MEASURED ARE BASED ON THE FLORIDA STATE PLANE COORDINATE SYSTEM, APPLICABLE ZONE, NAD 83 (2007) AND ARE DERIVED BY MULTIPLE REAL-TIME KINEMATIC GPS OBSERVATIONS. BEARINGS SHOWN HEREON, AND QUALIFIED AS (D) FOR DEED/LEGAL, (P) FOR PLAT ARE A MEANS TO REFERENCE THE SURVEYED PARCEL TO THE DEED OR PLAT OF RECORD. MORE SPECIFICALLY THE NORTH LINE OF THE SOUTHWEST 1/4 OF THE SOUTHWEST 1/4 OF SECTION 17, AS BEING NORTH 89°44'45" WEST.

10. SECTION CORNERS SHOWN WITH AN ASTERISKS (*) ON THE SECTION DETAIL (SEE THIS SHEET) ARE AS SHOWN ON THAT CERTAIN BOUNDARY SURVEY TITLE "SOUTH FORK – PHASE 6" PREPARED BY KING ENGINEERING ASSOCIATES, INC., DATED 1-09-04 AND WERE NOT FIELD VERIFIED FOR THIS SURVEY.

11. LAST DATE OF FIELD SURVEY: 10/11/2013

12. ELEVATIONS SHOWN HEREON ARE IN FEET AND ARE BASED ON HILLSBOROUGH CO. BENCHMARK "VC-273" H.C.S.D. ALUMINUM BM DISK IN CURB INLET HAVING A PUBLISHED ELEVATION OF 60.147 (NAVD88)

PHASE 1 PLANS NOTES

SEE THE OAKS AT SHADY CREEK PHASE 1, CONSTRUCTION DOCUMENTS

THE ONSITE CONTOUR AND (PHASE 1) UTILITY INFORMATION WAS DERIVED FROM THE OAKS AT SHADY CREEK PHASE 1 CONSTRUCTION DOCUMENTS AND WAS NOT FIELD VERIFIED.

PAVING, GRADING & DRAINAGE NOTES

1. ALL UNDERGROUND UTILITIES INCLUDING CONDUIT FOR ELECTRICAL, IRRIGATION, CABLE TV AND TELEPHONE CROSSINGS SHALL BE INSTALLED PRIOR TO PAVEMENT CONSTRUCTION. CONTRACTOR TO COORDINATE INSTALLATION OF ANY ADDITIONAL CONDUIT LOCATIONS WITH OWNER.
2. ALL MATERIALS AND CONSTRUCTION SHALL BE IN ACCORDANCE WITH HILLSBOROUGH COUNTY STANDARDS AND SPECIFICATIONS.
3. PIPE MEASUREMENTS ARE TO CENTER OF STRUCTURES FOR INLETS AND MANHOLES. STATION OFFSETS (LT OR RT) REFER TO CENTER OF STRUCTURES FOR MANHOLES. ALL PIPE LENGTHS ARE PLUS OR MINUS. ALL PIPE LENGTHS INCLUDE END TREATMENT.
4. ALL CURB CUT RAMPS TO BE CONSTRUCTED PER FLORIDA DEPARTMENT OF TRANSPORTATION STANDARDS (FDOT INDEX 304) AND BE ADA COMPLIANT INCLUDING USE OF TRUNCATED DOME TACTILE SURFACE
5. ALL EARTHWORK, PLACEMENT OF FILL AND PAVEMENT PREPARATION TO CONFORM TO THE MORE STRICT OF THE HILLSBOROUGH COUNTY TECHNICAL SPECIFICATIONS OR THE REPORT OF GEOTECHNICAL INVESTIGATION ENTITLED SHADY CREEK PRESERVE II BY FAULKNER ENGINEERING SERVICES (FES PROJECT No. 13-2064) DATED OCTOBER 17, 2013 AND THE THE REPORT OF GEOTECHNICAL EXPLORATION POND AND ROADWAY STUDY BY GROUND DOWN ENGINEERING, INC. DATED SEPTEMBER 2005.
6. TERMINATION OF BOTH FDOT TYPE "F" AND 6" VERTICAL CURB SHALL INCLUDE A 3' TRANSITION TO FLUSH UNLESS OTHERWISE NOTED ON THE CONSTRUCTION DRAWINGS.
7. EXTRA MATERIAL IS REQUIRED PER FDOT INDEX 205 (SHEET 1 OF 5) AROUND STORM PIPE MEETING COVER CRITERIA OF SAID INDEX.
8. JOINTS OF STORM SEWER SHALL BE STAGGERED FOR CROSSINGS OF THE SANITARY SEWER WITH LESS THAN 18 INCHES OF VERTICAL CLEARANCE SO THAT THE PIPE BELL IS NOT LOCATED AT THE CROSSING.
9. AS A COST SAVINGS MEASURE STORM STRUCTURES WITH MULTIPLE PIPE CONNECTIONS MAY BE OFFSET FROM THE CENTER OF THE STRUCTURE TO REDUCE THE OVERALL STRUCTURE SIZE. CONTRACTOR IS TO COORDINATE OFFSET CONNECTIONS WITH APPROPRIATE SUB CONTRACTORS INCLUDING PROJECT SURVEYOR.
10. POND T.O.B. LINE INDICATES TOP OF BANK; I.E., THE POINT AT WHICH THE SLOPE BEGINS. T.O.F. INDICATES TOP OF FREEBOARD.
11. DURING LAND ALTERATION AND CONSTRUCTION ACTIVITIES, IT SHALL BE UNLAWFUL TO REMOVE VEGETATION BY GRUBBING OR TO PLACE SOIL DEPOSITS, DEBRIS, SOLVENTS, CONSTRUCTION MATERIAL, MACHINERY OR OTHER EQUIPMENT OF ANY KIND WITHIN THE DRIPLINE OF A TREE REMAINING ON SITE UNLESS APPROVED BY THE COUNTY.
12. ALL TRIMMING UNDERTAKEN ON A TREE PROTECTED BY PROVISIONS OF LAND DEVELOPMENT CODE SHALL BE PRUNED IN ACCORDANCE WITH THE AMERICAN NATIONAL STANDARDS INSTITUTE (ANSI) A-300 PRUNING STANDARDS.
13. THE PROJECT LIES WITHIN FLOOD ZONE "X" AND "AE PER F.E.M.A. FIRM COMMUNITY PANEL NO: 12057C 0515H, DATED AUGUST 28, 2008.
14. ALL STORM DRAIN STRUCTURES TO CONFORM THE "FLORIDA DEPARTMENT OF TRANSPORTATION DESIGN STANDARDS FOR CONSTRUCTION, MAINTENANCE AND UTILITY OPERATIONS ON THE STATE HIGHWAY SYSTEM" MANUAL DATED JANUARY 2010 OR LATEST EDITION, OR THE HILLSBOROUGH COUNTY TRANSPORTATION TECHNICAL MANUAL DATED SEPTEMBER 2009.
15. ALL PROPOSED STORM GRATES, RING & COVERS AND SANITARY SEWER RING & COVERS TO MEET H-20 LOADING RATING. ALL STORM GRATES TO BE HOT DIPPED GALVANIZED RETICULINE STEEL GRATES. ALL EXISTING STRUCTURES TO BE MODIFIED AS REQUIRED TO MEET H-20 LOAD RATING AND ADJUSTED TO MEET PROPOSED GRADE.
16. THE STAKED SILT FENCE SHALL BE INSTALLED PRIOR TO EARTHWORK OPERATIONS COMMENCING AND IS TO BE MAINTAINED THROUGH PROJECT COMPLETION.
17. ALL SWALES SHALL BE SODDED AS SHOWN ON THE SECTIONS.
18. STORM SEWER PIPE LINES WILL NOT BE INSTALLED PRIOR TO PLACEMENT AND ALIGNMENT OF INLET STRUCTURES.
19. NO EXCAVATION SHALL EXTEND BELOW THE PERMITTED DESIGN DEPTHS/ELEVATIONS SHOWN ON THE DRAWINGS, UNLESS ADDITIONAL TESTING SUPPORTS OTHERWISE; AND NO LOWER SEMI-CONFINING UNIT CLAYEY SOIL MATERIAL AND/OR LIMESTONE MATERIALS SHALL BE EXCAVATED, REGARDLESS IF THESE MATERIALS ARE ENCOUNTERED WITHIN THE PERMITTED EXCAVATION DEPTHS/ELEVATIONS. IF ABOVE THE PERMITTED DEPTHS/ELEVATIONS, THEN EXCAVATION OPERATIONS SHALL CEASE IN THE GENERAL AREA. EPC WETLANDS MANAGEMENT STAFF MUST BE CONTACTED PRIOR TO ANY EXCAVATION OF CLAYS. * IN THE ABSENCE OF ANY CONFINING OR SEMI-CONFINING UNIT CLAYEY SOILS, A MINIMUM OF FIVE FEET OF UNDISTURBED SOILS SHALL REMAIN ABOVE THE UNDERLYING LIMESTONE. ANY EXCAVATION BELOW THE ELEVATIONS SHOWN ON THE PLANS WILL REQUIRE A APPROVED PERMIT MODIFICATION FROM SWFWMD PRIOR TO START OF WORK.

HILLS AND ASSOCIATES SURVEYOR'S NOTES

1. THE SURVEY SHOWN HEREON WAS PREPARED WITHOUT THE BENEFIT OF A TITLE POLICY AND IS SUBJECT TO ANY AND ALL RECORDED AND OR UNRECORDED EASEMENTS, RIGHTS OF WAY, RESTRICTIONS, ETC..

2. NO UNDERGROUND INSTALLATIONS OR IMPROVEMENTS WERE LOCATED AS A PART OF THIS SURVEY.

3. NO EVIDENCE OF CEMETERIES OR BURIAL GROUNDS WAS FOUND ON SITE AT TIME OF SURVEY.

4. BEARINGS AND DISTANCES ARE FIELD MEASURED UNLESS OTHERWISE NOTED.

5. BEARINGS SHOWN HEREON ARE BASED UPON ASSUMED DATUM, MORE SPECIFICALLY THE SOUTH LINE OF THE SOUTHWEST 1/4 OF SECTION 17, TOWNSHIP 31 SOUTH, RANGE 20 EAST, HILLSBOROUGH COUNTY, FLORIDA. SAID LINE HAS A BEARING OF: N89°44'36"W.

6. THE LEGAL DESCRIPTION SHOWN HEREON WAS TAKEN FROM OFFICIAL RECORD BOOKS 6406, PAGE 1951 AND 6255 PAGE 992 OF THE PUBLIC RECORDS OF HILLSBOROUGH COUNTY, FLORIDA.

7. THE WETLAND LINE SHOWN HEREON AS HAVING A LINE LABEL FROM L1 TO L79 WAS TAKEN FROM A SPECIFIC PURPOSE SURVEY AS PREPARED BY BURCAW & ASSOCIATES, INC., HAVING A JOB NUMBER S2-474 AND A DRAWING DATE OF 02/04/2002.

8. NO INTERIOR OCCUPATION OR IMPROVEMENTS HAVE BEEN LOCATED.

DESIGN STANDARDS NOTES

THIS SET OF PLANS WAS DESIGNED USING THE HILLSBOROUGH CO DESIGN STANDARDS IN PLACE AT THE TIME PRELIMINARY PLAT SUBMITTAL NOVEMBER 10, 2014 AND FLORIDA DEPARTMENT OF TRANSPORTATION, DESIGN STANDARDS DATE 2015, AND STANDARD SPECIFICATIONS FOR ROADWAY AND BRIDGE CONSTRUCTION DATED JANUARY 2015 AS AMENDED BY CONTRACT DOCUMENTS.
MANUAL OF UNIFORM MINIMUM STANDARDS FOR DESIGN, CONSTRUCTION, AND MAINTENANCE OF STREETS AND HIGHWAYS, STATE OF FLORIDA, MAY 2011 EDITION

SANITARY SEWER & WATER DISTRIBUTION NOTES

1. ALL ON-SITE PVC WATER MAINS 4-12 INCHES SHALL BE IN ACCORDANCE WITH AWWA C-900 STANDARDS. ALL ON-SITE PVC WATER MAINS 2-3 INCHES SHALL BE CLASS 1120 OR 1220 (SDR 21) AND MEET REQUIREMENTS OF ASTM D-2241. WATER MAINS SMALLER THAN 2 INCHES SHALL BE CLASS 1120 OR 1220 SCHEDULE 80 AND MEET REQUIREMENTS OF ASTM D-1785. PE PIPE 2" OR SMALLER SHALL MEET THE REQUIREMENTS OF ASTM D-1248. ALL GRAVITY SEWER LINES ARE PVC SDR-26 AND MEET THE REQUIREMENTS OF ASTM D3034 UNLESS OTHERWISE SHOWN ON PLANS OR PROFILES. ALL FORCE MAINS 4" TO 12" TO BE EITHER SDR21 OR C900 SDR 18 AND 16" PVC FORCEMAIN TO BE C905 SDR 25.
2. ALL DUCTILE IRON PIPE SHALL CONFORM TO THE REQUIREMENTS OF ANSI STANDARDS A21.51, MINIMUM CLASS 50. IN AREAS WHERE THE SOIL IS DETERMINED TO BE CORROSIVE OR HIGH GROUND WATER IS EXPECTED, THE PIPE SHALL BE INSTALLED IN LOOSE POLYETHYLENE ENCASEMENT NOT LESS THAN 8 MILS THICK AND INSTALLED IN ACCORDANCE WITH ANSI SPECIFICATION A21.51. ADEQUATE PROTECTIVE MEASURES AGAINST CORROSION SHALL BE USED.
3. ALL MATERIALS AND CONSTRUCTION SHALL BE IN ACCORDANCE WITH HILLSBOROUGH COUNTY STANDARDS AND SPECIFICATIONS.
4. CONFLICTS OF WATER, SANITARY AND STORM SEWER, TO BE RESOLVED BY ADJUSTING WATER LINES AS NECESSARY.
5. ALL WATER MAINS AND PVC CONDUIT TO BE CONSTRUCTED WITH MINIMUM 3 FEET OF COVER.
6. APPROXIMATE WATER LINE DISTANCES SHOWN ARE BETWEEN CENTERS OF MAIN FITTINGS. THE CONTRACTOR SHALL PROVIDE ALL FITTINGS REQUIRED FOR A COMPLETE WATER SYSTEM IN ACCORDANCE WITH GOOD CONSTRUCTION PRACTICES.
7. NO DEBRIS SHALL BE ALLOWED TO ENTER THE EXISTING SANITARY SYSTEM.
8. SANITARY SEWERS, FORCE MAINS, AND STORM SEWERS SHOULD ALWAYS CROSS UNDER WATER MAINS. SANITARY SEWERS, FORCE MAINS AND STORM SEWERS CROSSING WATER MAINS SHALL BE LAID TO PROVIDE A MINIMUM VERTICAL DISTANCE OF 18-INCHES BETWEEN THE INVERT OF THE UPPER PIPE AND THE CROWN OF THE LOWER PIPE WHENEVER POSSIBLE.
9. WHERE SANITARY SEWERS, FORCE MAINS AND STORM SEWERS MUST CROSS A WATER MAIN WITH LESS THAN 18-INCHES VERTICAL DISTANCE, BOTH THE SEWER AND THE WATER MAIN SHALL BE CONSTRUCTED OF DUCTILE IRON PIPE (DIP) AT THE CROSSING. (DIP IS NOT REQUIRED FOR STORM SEWERS IF IT IS NOT AVAILABLE IN THE SIZE PROPOSED.) SUFFICIENT LENGTHS OF DIP MUST BE USED TO PROVIDE A MINIMUM SEPARATION OF 10 FEET BETWEEN ANY TWO JOINTS. ALL JOINTS ON THE WATER MAIN WITHIN 20 FEET OF THE CROSSING MUST BE LEAK FREE, AND MECHANICALLY RESTRAINED. A MINIMUM VERTICAL CLEARANCE OF 6-INCHES MUST BE MAINTAINED AT THE CROSSING.
10. WHERE THERE IS NO ALTERNATIVE TO SEWER PIPES CROSSING OVER THE WATER MAIN, THE CRITERIA FOR MINIMUM SEPARATION OF 18-INCHES BETWEEN LINES AND 10 FEET BETWEEN JOINTS SHALL BE REQUIRED.
11. ALL CROSSINGS SHALL BE ARRANGED SO THAT THE SEWER PIPE JOINTS AND THE WATER MAIN PIPE JOINTS ARE EQUIDISTANT FROM THE POINT OF CROSSING (PIPES CENTERED ON THE CROSSING). WHERE A NEW PIPE CONFLICTS WITH AN EXISTING PIPE, THE NEW PIPE SHALL BE CONSTRUCTED OF DIP AND THE CROSSING SHALL BE ARRANGED TO MEET THE REQUIREMENTS ABOVE.
12. A MINIMUM 10-FOOT HORIZONTAL SEPARATION SHALL BE MAINTAINED BETWEEN ANY TYPE OF SEWER AND WATER MAIN IN PARALLEL INSTALLATIONS WHENEVER POSSIBLE.
13. IN CASES WHERE IT IS NOT POSSIBLE TO MAINTAIN A 10-FOOT HORIZONTAL SEPARATION, THE WATER MAIN MUST BE LAID IN A SEPARATE TRENCH OR ON AN UNDISTURBED EARTH SHELF LOCATED ON ONE SIDE OF THE SEWER OR FORCE MAIN AT SUCH AN ELEVATION THAT THE BOTTOM OF THE WATER MAIN IS AT LEAST 18-INCHES ABOVE THE TOP OF THE SEWER.
14. WHERE IT IS NOT POSSIBLE TO MAINTAIN A VERTICAL DISTANCE OF 18-INCHES IN PARALLEL INSTALLATIONS, THE WATER MAIN SHALL BE CONSTRUCTED OF DIP AND THE SEWER OR THE FORCE MAIN SHALL BE CONSTRUCTED OF DIP (IF AVAILABLE IN THE SIZE PROPOSED) WITH A MINIMUM VERTICAL DISTANCE OF 6-INCHES. THE WATER MAIN SHOULD ALWAYS BE ABOVE THE SEWER. JOINTS ON THE WATER MAIN SHALL BE LOCATED AS FAR APART AS POSSIBLE FROM JOINTS ON THE SEWER OR FORCE MAIN (STAGGERED JOINTS).
15. ALL DIP SHALL BE CLASS 50 OR HIGHER. ADEQUATE PROTECTIVE MEASURES AGAINST CORROSION SHALL BE USED.
16. THE CONTRACTOR/ENGINEER OF RECORD MUST CONTACT THE HILLSBOROUGH COUNTY WATER DEPT. UTILITY INSPECTION SECTION AND LINE MAINTENANCE TO SET UP THE PRE CONSTRUCTION MEETING. CONTACT WILLIE LAVANDERIA AT 307-8373 FOR INSPECTIONS AND THE SOUTH/CENTRAL LINE MAINTENANCE UNIT AT 671-7604 OR THE NORTHWEST LINE MAINTENANCE UNIT AT 554-5010.
17. THE LOCATION OF ALL NEWLY INSTALLED FIRE HYDRANTS SHALL BE IDENTIFIED WITH A BLUE REFLECTIVE PAVEMENT MARKER INSTALLED ON THE ROADWAY, PERPENDICULAR TO THE FIRE HYDRANT. THE REFLECTIVE MARKER WILL BE LOCATED IN THE CENTER OF THE LANE CLOSEST TO THE HYDRANT.
18. ALL NON-METALLIC PIPE WILL BE INSTALLED WITH 2 PAIR 10 GAUGE COPPER TRACER WIRE AND MEET THE REQUIREMENTS OF HILLSBOROUGH COUNTY TECHNICAL MANUAL.
19. FHA EL= REFERENCE FLANGE ELEVATION
20. THE ENGINEER OF RECORD AND/OR CONTRACTOR WILL BE RESPONSIBLE FOR THE FLOW TESTING AND COLOR CODING OF ALL NEWLY INSTALLED FIRE HYDRANTS IN THE EXISTING OR PROPOSED HILLSBOROUGH COUNTY RIGHT OF WAY AND UTILITY EASEMENTS THAT ARE TO BE DEDICATED TO HILLSBOROUGH COUNTY PRIOR TO THE FINAL INSPECTION OF THE PROJECT. THE ENGINEER OF RECORD AND/OR CONTRACTOR SHALL REFER TO NFPA STANDARDS 291 FOR FLOW TESTING AND COLOR CODING METHODS AND PROCEDURES.

SITE DATA

LAND USE:	R4
ZONING DISTRICT:	PD
PROPOSED USE:	SINGLE FAMILY
SITE AREA:	36.50 AC
DEVELOPABLE UPLAND SITE AREA: (PRIOR TO IMPACTS)	35.1 AC
MAXIMUM LOT COVERAGE:	50%
MAXIMUM BUILDING HEIGHT:	35'
TOTAL UNITS PROPOSED:	145 UNITS

PROPOSED SITE COVERAGE

BUILDINGS:	8.3 AC (23%)
POND:	4.3 AC (12%)
PAVEMENT:	5.7 AC (15%)
WETLAND:	1.4 AC (4%)
OPEN SPACE:	16.8 AC (46%)
TOTAL:	36.50 AC (100%)

SETBACKS: FRONT 20', REAR 20' & SIDE 5' MIN. AND 15' FOR REAR YARDS THAT FUNCTION AS SIDE YARDS.

EROSION AND SEDIMENTATION CONTROL NOTES

1. THE INSTALLATION OF TEMPORARY EROSION CONTROL BARRIERS SHALL BE COORDINATED WITH THE CONSTRUCTION OF THE PERMANENT EROSION CONTROL FEATURES TO THE EXTENT NECESSARY TO ASSURE ECONOMICAL, EFFECTIVE AND CONTINUOUS CONTROL OF EROSION AND WATER POLLUTION THROUGHOUT THE LIFE OF THE CONSTRUCTION PHASE.
2. THE TYPE OF EROSION CONTROL BARRIERS USED SHALL BE GOVERNED BY THE NATURE OF THE CONSTRUCTION OPERATION AND SOIL TYPE THAT WILL BE EXPOSED. SILTY AND CLAYEY MATERIAL USUALLY REQUIRE SOLID SEDIMENT BARRIERS TO PREVENT TURBID WATER DISCHARGE, WHILE SANDY MATERIAL MAY NEED ONLY SILT SCREENS OR SYNTHETIC BALES TO PREVENT EROSION. FLOATING TURBIDITY CURTAINS SHOULD BE USED IN OPEN WATER SITUATIONS. DIVERSION DITCHES OR SWALES MAY BE REQUIRED TO PREVENT TURBID STORMWATER RUNOFF FROM BEING DISCHARGED TO WETLANDS OR OTHER WATER BODIES. IT MAY BE NECESSARY TO EMPLOY A COMBINATION OF BARRIERS, DITCHES, AND OTHER EROSION/TURBIDITY CONTROL MEASURES IF CONDITIONS WARRANT.
3. WHERE PUMPS ARE TO BE USED TO REMOVE TURBID WATERS FROM THE CONSTRUCTION AREA, THE WATER SHALL BE TREATED TO REDUCE TURBIDITY TO STATE WATER QUALITY STANDARDS PRIOR TO DISCHARGE TO THE WETLANDS. TREATMENT METHODS INCLUDE, FOR EXAMPLE, TURBID WATER BEING PUMPED INTO GRASSED SWALES OR APPROPRIATE VEGETATED AREAS (OTHER THAN UPLAND PRESERVATION AREAS AND WETLAND BUFFERS), SEDIMENT BASINS, OR CONFINED BY AN APPROPRIATE ENCLOSURE SUCH AS TURBIDITY BARRIERS, AND KEPT CONFINED UNTIL ITS TURBIDITY LEVEL MEETS STATE WATER QUALITY STANDARDS.
4. THE CONTRACTOR SHALL PROVIDE ROUTINE MAINTENANCE OF PERMANENT AND TEMPORARY EROSION CONTROL FEATURES UNTIL THE PROJECT IS COMPLETE AND ALL BARED SOIL STABILIZED. SILTATION ACCUMULATIONS GREATER THAN THE LESSER OF 12 INCHES OR ONE-HALF THE DEPTH OF THE SILTATION CONTROL BARRIER SHALL BE IMMEDIATELY REMOVED AND PLACED IN UPLAND AREAS.
5. WATER REMAINING IN THE EXCAVATIONS AFTER CONSTRUCTION MUST BE KEPT CONFINED WITHIN THE EXCAVATIONS PRIOR TO DISCHARGE (IF APPLICABLE), UNTIL THE TURBIDITY LEVEL OF THE POND WATER MEETS STATE WATER QUALITY STANDARDS.
6. NO CLAY MATERIAL SHALL BE LEFT EXPOSED IN THE EXCAVATIONS. IF CLAY OR SANDY CLAYS ARE LEFT EXPOSED AT THE PERMITTED DEPTH, THE CONTRACTOR SHALL OVER EXCAVATE THE POND'S BOTTOM AND SIDE SLOPES BY A MINIMUM OF 12 INCHES AND BACKFILL WITH CLEAN SANDS.
7. PROVIDE ALL DISTURBED AREAS WITHIN THE LIMITS OF THE WORK WITH TEMPORARY SOIL EROSION CONTROL AND SEDIMENT CONTROL, UTILIZING EARTH DAMS & PONDS, GRADE TO DRAIN SWALES, SETTLING BASINS, SILT FENCES, STONE FILTERS, SYNTHETIC BALE FILTERS, ETC., TREATING ALL SOIL SURFACES WITH SEEDED TOPSOIL AND / OR MULCH AFTER GRADING.
8. ALL SOIL EROSION AND SEDIMENT CONTROL PRACTICES SHALL BE INSTALLED PRIOR TO ANY MAJOR SOIL DISTURBANCE OR IN THEIR PROPER SEQUENCE, AND MAINTAINED UNTIL PERMANENT PROTECTION IS ESTABLISHED.
9. CONSTRUCTION OPERATIONS SHALL BE CARRIED OUT IN SUCH A MANNER THAT EROSION AND AIR AND WATER POLLUTION WILL BE MINIMIZED. STATE AND LOCAL LAWS SHALL BE COMPLIED WITH AT ALL TIMES.
10. TO MINIMIZE SOIL EROSION, PROPOSED LAND ALTERATION ACTIVITIES SHALL NOT UNNECESSARILY REMOVE EXISTING VEGETATION AND ALTER EXISTING TOPOGRAPHY. ADEQUATE PROTECTION MEASURES (I.E. SYNTHETIC BALES, BAFFLES, SODDING AND SANDBAGGING) SHALL BE PROVIDED, AS NECESSARY, TO MINIMIZE EROSION AND DOWNSTREAM SEDIMENTATION CAUSED BY SURFACE WATER RUN-OFF ON EXPOSED LAND SURFACES.
11. PERMANENT VEGETATION SHALL BE BY SEEDING OR SODDING ALL EXPOSED AREAS WITHIN THREE DAYS AFTER FINAL GRADING. MULCH SHALL BE USED AS NECESSARY FOR PROTECTION UNTIL 75% GROWTH IS ESTABLISHED. AT THE TIME WHEN THE SITE PREPARATION FOR PERMANENT VEGETATIVE STABILIZATION IS GOING TO BE ACCOMPLISHED, ANY SOIL WHICH WILL NOT PROVIDE A SUITABLE ENVIRONMENT TO SUPPORT ADEQUATE VEGETATIVE GROUND COVER SHALL BE REMOVED OR TREATED IN SUCH A WAY AS TO PERMANENTLY ADJUST THE SOIL CONDITIONS AND RENDER IT SUITABLE FOR VEGETATIVE GROUND COVER.
12. ALL NEW EROSION AND SILT CONTROL METHODS AND LOCATIONS INDICATED ON THIS DRAWING ARE FOR START-UP AND GENERAL REFERENCE ONLY AND SHALL BE ADJUSTED, AS REQUIRED, TO SUIT THE PROCESS OF THE CONSTRUCTION.
13. ANY AREAS SUBJECT TO EROSION MUST BE ADEQUATELY STABILIZED WITH VEGETATIVE MATERIAL THAT WILL, WITHIN A REASONABLE TIME FRAME, DETER SOIL DISTURBANCE. SODDING, PLUGGING, SPRIGGING. OR SEEDING IS ACCEPTABLE FOR STABILIZATION; HOWEVER, SODDING MAY BE REQUIRED IN AREAS OF EROSION-PRONE SOILS OR WHERE SLOPES ARE GREATER THAN 5:1. VEGETATION OTHER THAN GRASS IS ACCEPTABLE UNLESS OTHERWISE SPECIFIED.

    FOR COMMERCIAL SITE DEVELOPMENT PROJECTS, NO MORE THAN 50% OF THE LANDSCAPED AREA MAY BE PLANTED WITH SHALLOW-ROOTED (I.E., ST AUGUSTINE) TURF GRASS VARIETIES. THESE TURF GRASS VARIETIES SHALL BE CONSOLIDATED IN AND LIMITED TO AREAS THAT ARE PROVIDED WITH CENTRAL AUTOMATIC IRRIGATION SYSTEMS. A METHOD OF STABILIZATION MUST BE SHOWN ON THE SITE DEVELOPMENT CONSTRUCTION PLANS.
14. SEE PGD PLANS FOR ADDITIONAL EROSION CONTROL LOCATION INFORMATION AND DETAILS.
15. CONTRACTOR TO COMPLY WITH ALL REGULATIONS AS SET FORTH BY THE FDEP NPDES STORMWATER REGULATORY PROGRAM.
16. CONTRACTOR TO CONSTRUCT PROPOSED STORMWATER PONDS IN EITHER CELLS OR SEQUENCED SO THAT THE FIRST PONDS FUNCTION AS SEDIMENT BASINS TO SEPARATE SUSPENDED SOLIDS FROM PRODUCED GROUNDWATER. ALL PRODUCED GROUNDWATER MUST MEET CRITERIA OF "STATE OF FLORIDA DEPARTMENT OF ENVIRONMENTAL PROTECTION GENERIC PERMIT FOR THE DISCHARGE OF PRODUCED GROUNDWATER FROM ANY NON-CONTAMINATED SITE ACTIVITY" EFFECTIVE DATE FEBRUARY 14, 2000; DOCUMENT NUMBER 62-621.300(2).
17. DURING LAND ALTERATION AND CONSTRUCTION ACTIVITIES, IT SHALL BE UNLAWFUL TO REMOVE VEGETATION BY GRUBBING OR TO PLACE SOIL DEPOSITS, DEBRIS, SOLVENTS, CONSTRUCTION MATERIAL, MACHINERY OR OTHER EQUIPMENT OF ANY KIND WITHIN THE DRIPLINE OF A TREE TO REMAIN ON THE SITE UNLESS OTHERWISE APPROVED BY THE COUNTY.

WALL NOTES

NOTE:
THE STRUCTURAL DESIGN OF THE RETAINING WALLS INCLUDING ALL ASSOCIATED APPURTENANCES SHALL BE BY A STRUCTURAL ENGINEER. THIS DESIGN SHALL INCLUDE SIGNED AND SEALED SHOP DRAWINGS TO BE SUBMITTED TO KING FOR REVIEW TO VERIFY THE DESIGN MEETS PLAN SPECIFICATIONS ONLY. IN ADDITION THE STRUCTURAL ENGINEER SHALL PROVIDE CONSTRUCTION OBSERVATION AND WRITTEN CERTIFICATION THAT THE WALLS ARE IN COMPLIANCE WITH THE STRUCTURAL PLANS AND SPECIFICATIONS. THESE ITEMS SHALL BE INCLUDED IN THE CONTRACTORS BID ITEMS.

Q:\CIVIL\5163\905\000\Production\Drawings\NTS-LEG.dwg , February 11, 2015 10:30 AM , King Engineering Associate Inc.
© COPYRIGHT 2014 KING ENGINEERING ASSOCIATES, INC. DRAWINGS AND CONCEPTS MAY NOT BE USED OR REPRODUCED WITHOUT WRITTEN PERMISSION CONSENT IS HEREBY GRANTED SPECIFICALLY TO GOVERNMENTAL AGENCIES TO REPRODUCE THIS DOCUMENT IN COMPLIANCE WITH F.S. CHAPTER 119.

DESIGNED: JLW
DRAWN: JLW
CHECKED: TLT/AGK
Q.C.: LJK

THE SIGNATURE OF THE QUALITY CONTROL OFFICER IN THIS SPACE INDICATES THAT ALL REQUIRED PERMITS HAVE BEEN OBTAINED AND THAT CONSTRUCTION IS AUTHORIZED TO COMMENCE.
MER 2/5/15

King ENGINEERING ASSOCIATES, INC.
4921 Memorial Highway
One Memorial Center, Suite 300
Tampa, Florida 33634
Phone 813 880-8881
Fax 813 880-8882
www.kingengineering.com
Engineering License #2610

THE OAKS AT SHADY CREEK, PHASE 2
FOR
LENNAR HOMES, LLC
4600 WEST CYPRESS ST. SUITE 200
TAMPA, FL. 34683
813-574-5653

NO.	DATE	DESCRIPTION	APP'D BY

NOTES AND LEGENDS

JOB NO.: 5163-905-000
DATE: 10-28-2014
SCALE: AS SHOWN
SHEET NO.: C1.02
HC FINAL SET
FEB. 11, 2015

TYPICAL 50' X 110' LOT LAYOUT

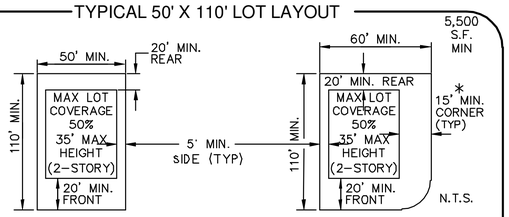

* CORNER LOTS MAY HAVE A MINIMUM 15' FRONT YARD SETBACK FOR THE FRONT YARD THAT FUNCTIONS AS A SIDE YARD PROVIDED SAID YARD DOES NOT HAVE A STREET-FACING GARAGE.

LEGAL DESCRIPTION

LEGAL DESCRIPTION: (BY KING ENGINEERING ASSOCIATES, INC.)

A PORTION OF THOSE LANDS DESCRIBED IN OFFICIAL RECORD BOOK 22715, PAGE 993 AND A PORTION OF THOSE LANDS DESCRIBED IN OFFICIAL RECORDS BOOK 22715, PAGE 1009, BOTH OF THE PUBLIC RECORDS OF HILLSBOROUGH COUNTY, FLORIDA, BEING A TRACT OF LAND LYING IN SECTION 17, TOWNSHIP 31 SOUTH, RANGE 20 EAST, HILLSBOROUGH COUNTY, FLORIDA, AND BEING MORE PARTICULARLY DESCRIBED AS FOLLOWS:

BEGINNING AT THE NORTHWEST CORNER OF LOT 76, OAKS AT SHADY CREEK PHASE 1, AS RECORDED IN PLAT BOOK ___, PAGE ___ OF THE PUBLIC RECORDS OF HILLSBOROUGH COUNTY, FLORIDA; THENCE ALONG THE NORTHERLY LINE OF SAID OAKS AT SHADY CREEK PHASE 1 THE FOLLOWING EIGHTEEN (18) COURSES: (1) SOUTH 00°00'00" EAST, A DISTANCE OF 120.55 FEET; (2) SOUTH 90°00'00" WEST, A DISTANCE OF 10.00 FEET; (3) SOUTH 00°00'00" EAST, A DISTANCE OF 50.00 FEET; (4) NORTH 90°00'00" EAST, A DISTANCE OF 22.09 FEET; (5) SOUTH 00°00'00" EAST, A DISTANCE OF 211.34 FEET; (6) SOUTH 90°00'00" WEST, A DISTANCE OF 290.00 FEET; (7) SOUTH 00°00'00" EAST, A DISTANCE OF 526.80 FEET; (8) SOUTH 47°12'05" WEST, A DISTANCE OF 428.21 FEET TO A POINT ON A CURVE TO THE RIGHT; (9) WESTERLY 206.65 FEET ALONG THE ARC OF SAID CURVE, HAVING A RADIUS OF 275.00 FEET, A CENTRAL ANGLE OF 43°03'19", AND A CHORD BEARING AND DISTANCE OF SOUTH 68°43'44" WEST 201.82 FEET; (10) NORTH 89°44'36" WEST, A DISTANCE OF 939.53 FEET; (11) NORTH 00°15'24" EAST, A DISTANCE OF 38.09 FEET TO THE POINT ON A NON-TANGENT CURVE TO THE RIGHT; (12) NORTHERLY 594.73 FEET ALONG THE ARC OF SAID CURVE, HAVING A RADIUS OF 193.00 FEET, A CENTRAL ANGLE OF 176°33'25", AND A CHORD BEARING AND DISTANCE OF NORTH 08°23'38" EAST 385.83 FEET; (13) SOUTH 83°19'40" EAST, A DISTANCE OF 54.32 FEET; (14) SOUTH 54°20'15" EAST, A DISTANCE OF 107.03 FEET; (15) NORTH 19°36'46" EAST, A DISTANCE OF 916.74 FEET; (16) NORTH 70°25'19" EAST, A DISTANCE OF 50.50 FEET; (17) NORTH 78°28'36" EAST, A DISTANCE OF 100.59 FEET; (18) NORTH 54°19'42" EAST, A DISTANCE OF 35.84 FEET TO THE SOUTH LINE OF SOUTH FORK UNIT 6, AS RECORDED IN PLAT BOOK 105, PAGE 222 OF THE PUBLIC RECORDS OF HILLSBOROUGH COUNTY, FLORIDA; THENCE ALONG SAID SOUTH LINE OF SOUTH FORK UNIT 6 THE FOLLOWING TWO (2) COURSES: (1) SOUTH 89°44'38" EAST, A DISTANCE OF 870.75 FEET; (2) SOUTH 89°59'52" EAST, A DISTANCE OF 168.58 FEET TO THE POINT OF BEGINNING.

CONTAINING 36.502 ACRES.

CURVE TABLE					
CURVE	RADIUS	LENGTH	CHORD	BEARING	DELTA
C1	275.00'	206.65'	201.82'	S68°43'44"W	43°03'19"
C2	193.00'	594.73'	385.83'	N08°23'38"E	176°33'25"

LINE TABLE		
LINE	BEARING	DISTANCE
L1	S00°00'00"E	120.55'
L2	S90°00'00"W	10.00'
L3	S00°00'00"E	50.00'
L4	N90°00'00"E	22.09'
L5	S00°00'00"E	211.34'
L6	S90°00'00"W	290.00'
L7	N00°15'24"E	38.09'
L8	S83°19'40"E	54.32'
L9	S54°20'15"E	107.03'
L10	N70°25'19"E	50.50'
L11	N78°28'36"E	100.59'
L12	N54°19'42"E	35.84'
L13	S89°59'52"E	168.58'

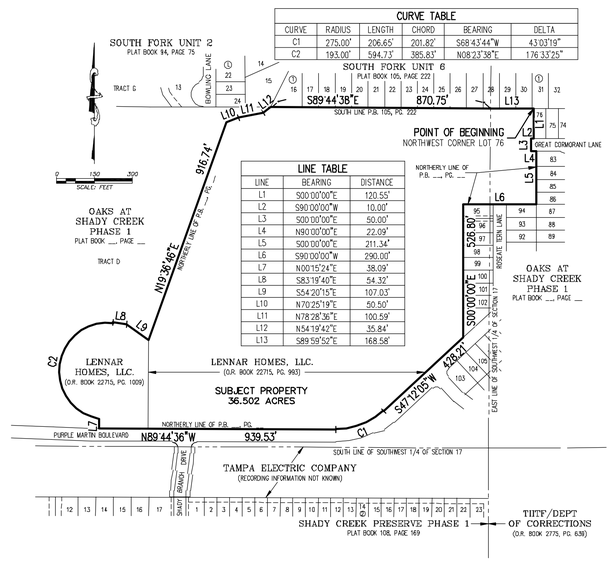

PHASE 1 PLANS LEGEND

FIRE HYDRANT
WATER VALVE
TEMP BLOWOFF
WM FITTING
WATER SERVICE
SINGLE SANITARY SERVICE
DOUBLE SANITARY SERVICE
SANITARY SEWER MH
TRAFFIC SIGNS
STORM STRUCTURES
UNDERDRAIN AND CLEANOUT
CONTOUR LINE — 75
TREE BARRICADE
SILT FENCE
SWALE
PHASE 1 POND LIMITS
PHASE 1 MITIGATION AREA
PHASE 1 LOT NUMBER — 103

EXISTING LEGEND

BEARING/DISTANCE PER RECORDED PLAT — (P)
BEARING/DISTANCE PER DEED DESCRIPTION — (D)
BEARING/DISTANCE PER FIELD MEASUREMENT — (M)
BEARING/DISTANCE PER CALCULATION — (C)
TYPICAL ROADWAY SPOT ELEVATIONS (IF SHOWN) — TOP OF CURB, FLOWLINE OF CURB, EDGE OF PAVEMENT
TYPICAL GROUND SPOT ELEVATIONS (IF SHOWN) — DRAINS ELEVATIONS
OVERHEAD LINES — OHXL
SANITARY SEWER PIPE, MANHOLE, CLEANOUT, VALVE & PAINT MARK IDENTIFYING PROBABLE LOCATION OF PIPE — SSD, SV, E.P.M.
TELEPHONE UTILITY MANHOLE, TELEPHONE UTILITY CABLE & PAINT MARK IDENTIFYING PROBABLE LOCATION OF UTILITY — T, E.P.M.
GAS LINE WITH GAS VALVE, GAS METER & PAINT MARK IDENTIFYING PROBABLE LOCATION OF UTILITY — GV, G, E.P.M.
WATER LINE WITH WATER VALVE, WATER METER & PAINT MARK IDENTIFYING PROBABLE LOCATION OF UTILITY — WV, W, E.P.M.
ELECTRIC UTILITY LINE WITH ELECTRIC UTILITY MANHOLE & PAINT MARK IDENTIFYING PROBABLE LOCATION OF UTILITY — E, E.P.M.
6' CHAIN LINK FENCE UNLESS OTHERWISE NOTED
FOUND IRON ROD (SIZE AND TYPE AS INDICATED) — F.I.R.
FOUND IRON PIPE (SIZE AND TYPE AS INDICATED) — F.I.P.
SET 1/2" IRON ROD & CAP L.B.#2610 — S.I.R.
FOUND CONCRETE MONUMENT (SIZE AND TYPE AS INDICATED) — F.C.M.
SET 4"X4" CONCRETE MONUMENT "PRM LB#2610" — S.C.M.

PROPOSED LEGEND

SPOT ELEVATIONS — x27.5
SWALE
DIRECTION OF FLOW
TOP OF BANK
STORM SEWER — XXX LF OF XX" RCP @ X.XX%
STORM SEWER INLET
FLARED/MITERED END SECTION
SANITARY SEWER — XXX LF OF XX" PVC @ X.XX%
SANITARY SEWER SERVICE
WATER MAIN — XXX LF OF XX" WM
REDUCER
GATE VALVE
WATER MAIN SERVICE — (SINGLE)
CONSTRUCTION BLOW-OFF
FIRE HYDRANT ASSEMBLY
FORCEMAIN
RECLAIMED WATER MAIN — RCW
RECLAIMED WATER SERVICE — (DOUBLE) (SINGLE) RCW
OVERHEAD UTILITY — OHW
FIBER OPTIC — BFO
RAW WATER MAIN — RWM
GAS LINE — GAS
CABLE TV — CTV
ELECTRIC LINE — ELC
PHONE LINE — TEL
PROPERTY LINE
EXTERIOR BUILDING WALL
CONTOUR LINE (MAJOR) — 10
CONTOUR LINE (MINOR) — 1
WETLAND LINE
SETBACK LINE
BUFFER LINE
EASEMENT LINE
CENTERLINE
RIGHT OF WAY LINE
PHASE LINE
TREE BARRICADE
SILT FENCE
SILT FENCE – (PHASE 1)
FEMA FLOOD ZONE LINE
FENCE LINE — D
LIMITS OF CONSTRUCTION
RH — RIGHT HAND GARAGE
LH — LEFT HAND GARAGE
T/W – B/W — TOP AND BOTTOM OF WALL ELEVATIONS

PROPOSED CAR COUNT — #
EXISTING TREE TO BE REMOVED
DIRECTION OF SLOPE
UTILITY CAP
SIGN
WHEELSTOP
HANDICAP SPACE
BARRICADE
TEMPORARY BARRICADE
AIR RELEASE VALVE — A
BLOW-OFF ASSEMBLY — B
CHLORINE INJECTION POINT — CL
SAMPLE POINT — SP
WELL LOCATION
BORING ELEVATION / BORING NUMBER — SHW=75.3 AB-14
WETLAND SHW/NP LOCATION — SHW=75.3 #3

* BORING NUMBERS WITH A "X" ARE INCLUDED IN THE GEOTECHNICAL REPORT BY FAULKNER ENGINEERING
BORING NUMBERS WITHOUT THE "X" ARE INCLUDED IN THE GEOTECHNICAL REPORT BY GROUND DOWN ENGINEERING

PAD ELEVATION — ??.?? ? — LOT TYPE
FF ELEVATION — FF ??.??
SECTION NAME — A
SECTION LOCATED ON SHEET NO. — 50
SECTION NAME — SECTION A
SCALE
SECTION TAKEN ON SHEET NO. — 28

HATCH DESCRIPTION

CONCRETE LIMITS
WETLAND IMPACT
WETLAND LIMITS
10' UTILITY EASEMENT SEE SHEET C7.01 FOR DETAILS — 20' D.E. 10' U.E.
20' DRAINAGE EASEMENT

EXISTING TREE LEGEND

= 12" HOLLY TREE
= 12" OAK TREE
= 12" PALM TREE
= 12" EUCALYPTUS TREE
= 12" CEDAR TREE
= 12" ELM TREE
= 12" MAPLE TREE

12" = TREE HAVING ONE TRUNK AT BREAST HEIGHT, 12" IN DIAMETER
12" 13" 5" = TREE HAVING MULTIPLE TRUNKS AT BREAST HEIGHT 12", 13" AND 5" IN DIAMETER

Q:\CIVIL\5163\905\000\Production\Drawings\NTS-LEG.dwg , February 11, 2015 10:30 AM, King Engineering Associate Inc.
© COPYRIGHT 2014 KING ENGINEERING ASSOCIATES, INC. DRAWINGS AND CONCEPTS MAY NOT BE USED OR REPRODUCED WITHOUT WRITTEN PERMISSION. COVERS IS HEREBY GRANTED SPECIFICALLY TO CONSTRUCTION PLANNING TO REPRODUCE THIS DOCUMENT IN CONFORMANCE WITH F.S. CHAPTER 119.

DESIGNED JLW	THE SIGNATURE OF THE QUALITY CONTROL OFFICER IN THIS SPACE INDICATES THAT ALL REQUIRED PERMITS HAVE BEEN OBTAINED AND THAT CONSTRUCTION IS AUTHORIZED TO COMMENCE.	King ENGINEERING ASSOCIATES, INC.	4921 Memorial Highway One Memorial Center, Suite 300 Tampa, Florida 33634 Phone 813 880-8881 Fax 813 880-8882 www.kingengineering.com Engineering License #2610
DRAWN JLW			
CHECKED TLT/AGK			
Q.C. TLT	MER 2/5/15		

THE OAKS AT SHADY CREEK, PHASE 2

FOR

LENNAR HOMES, LLC

4600 WEST CYPRESS ST. SUITE 200
TAMPA, FL. 34683
813-574-5653

NOTES AND LEGENDS

NO.	DATE	DESCRIPTION	APP'D BY

JOB NO. 5163-905-000
DATE: 10-28-2014
SCALE: AS SHOWN
SHEET NO. C1.03
HC FINAL SET FEB. 11, 2015

SITE DESCRIPTION

PROJECT NAME: THE OAKS AT SHADY CREEK PHASE 2 LAT. = N 27°46'44" LONG. = W 82°19'50"	OWNER'S NAME: LENNAR HOMES, LLC OWNER'S ADDRESS: 4600 WEST CYPRESS ST., SUITE 200 TAMPA FL 33607

DESCRIPTION OF NATURE OF CONSTRUCTION ACTIVITY

CONSTRUCTION OF A SINGLE FAMILY RESIDENTIAL DEVELOPMENT. COMPONENTS INCLUDE INTERNAL ROADWAYS, PARKING, WATER & SANITARY SEWER UTILITIES AND STORM WATER UTILITIES.

SOIL DISTURBING ACTIVITIES INCLUDE:
INSTALLING STABILIZED CONSTRUCTION ENTRANCES, CONSTRUCTION OF EROSION AND SEDIMENT CONTROLS, GRADING, AND CONSTRUCTION OF STORM SEWER.

LIMITS OF CONSTRUCTION AREA: 36.5 ± ACRES, LIMIT OF DISTURBANCE 27.5 AC. +/−

SEQUENCE OF MAJOR ACTIVITIES:

1. PRIOR TO THE COMMENCEMENT OF CLEARING, GRUBBING, AND DEMOLITION, THE SITE CONTRACTOR SHALL INSTALL ALL EROSION CONTROL DEVICES CALLED FOR ON THE PLANS.
2. UPON INSTALLATION OF THE EROSION CONTROL DEVICES, THE SITE CONTRACTOR MAY BEGIN SITE CLEARING, DEMOLITION, EARTHWORK, DRAINAGE, UTILITY AND ROADWAY CONSTRUCTION ACTIVITIES WITHIN THE CONSTRUCTION LIMITS. THE SITE CONTRACTOR SHALL STABILIZE ALL AREAS DISTURBED WITHIN FIVE DAYS OF THE COMPLETION OF GRADING ACTIVITIES OF THE DISTURBED AREA.
3. THE SITE CONTRACTOR SHALL REMOVE ALL EROSION PROTECTION DEVICES WITHIN EACH CONTRIBUTING AREA FOLLOWING PERMANENT STABILIZATION OF ALL DISTURBED AREAS.

NAME OF RECEIVING WATERS: LITTLE BULLFROG CREEK

CONTROLS

EROSION AND SEDIMENT CONTROLS

STABILIZATION PRACTICES

WIND EROSION STABILIZATION: THE CONTRACTOR SHALL DENUDE ONLY AREAS WHERE IT IS EXPECTED TO BE GRADED OR ALTERED WITHIN A TWO (2) WEEK TIME−FRAME. FINAL GRADES SHALL BE PERFORMED AND TEMPORARY OR PERMANENT SOIL STABILIZATION SHALL BE APPLIED. AREAS WHERE CONSTRUCTION OPERATIONS WILL BE CONTINUOUS, FUGITIVE DUST SHALL BE MANAGED BY APPLYING A WATER SPRAY TO SATURATE THE SURFACE SOILS ON A DAILY BASIS, OR AS NEEDED TO MAINTAIN MINIMAL DUST TRANSPORT. FUGITIVE DUST SHALL BE MONITORED CONTINUOUSLY AND ADDITIONAL MEASURES MAY NEED TO BE TAKEN TO CONTROL OFF−SITE TRANSPORT OF UNACCEPTABLE LEVELS OF DUST.

TEMPORARY STABILIZATION: TOP OF SOIL STOCK PILES AND DISTURBED PORTIONS OF THE SITE WHERE CONSTRUCTION ACTIVITY TEMPORARILY CEASES FOR AT LEAST 21 DAYS WILL BE STABILIZED WITH TEMPORARY GRASS AND MULCH NO LATER THAN 5 DAYS FROM THE LAST CONSTRUCTION ACTIVITY. GRASS SEED SHALL BE A MIXTURE OF 20 PARTS OF BERMUDA SEED AND 80 PARTS OF PENSACOLA BAHIA. THE SEPARATE TYPES OF SEED USED SHALL BE THOROUGHLY DRY MIXED IMMEDIATELY BEFORE SOWING. SEED WHICH HAS BECOME WET SHALL NOT BE USED. THE MULCH MATERIAL USED SHALL NORMALLY BE DRY MULCH. DRY MULCH SHALL BE STRAW OR HAY, CONSISTING OF OAT, RYE OR WHEAT STRAW, OR OF PANGOLA, PEANUT, COASTAL BERMUDA OR BAHIA GRASS HAY. ONLY UNDETERIORATED MULCH WHICH CAN BE READILY CUT INTO THE SOIL SHALL BE USED. AREAS OF THE SITE WHICH ARE TO BE PAVED WILL BE TEMPORARILY STABILIZED BY APPLYING STABILIZATION AND BASE.

PERMANENT STABILIZATION: DISTURBED PORTIONS OF THE SITE WHERE CONSTRUCTION ACTIVITIES PERMANENTLY CEASES SHALL BE STABILIZED WITH SOD NO LATER THAN 5 DAYS AFTER THE LAST CONSTRUCTION ACTIVITY.

STRUCTURAL PRACTICES

STAKED SILT FENCES: THE STAKED SILT FENCES WILL BE CONSTRUCTED ALONG THE PERIMETER AS PREVIOUSLY EXPLAINED. THESE DEVICES WILL STOP AND DIVERT RUNOFF TO THE SEDIMENT BASINS.

SEDIMENT BASINS: THE STORM WATER MANAGEMENT AREAS WILL ACT AS SEDIMENT BASINS DURING CONSTRUCTION. THE SEDIMENT BASINS WILL BE CONSTRUCTED TO THE DESIGN CROSS−SECTION, OR A MINIMUM OF 2' BELOW EXISTING GROUND AT THE CONTRACTORS DISCRETION TO ALLOW SILTS TO BE COLLECTED AND REMOVED PRIOR TO COMPLETION OF THE GRADING.

STORM WATER MANAGEMENT

STORM WATER DRAINAGE WILL BE PROVIDED BY A CURB, SWALE, STORM SEWER, OR CATCH BASIN SYSTEM FOR THE DEVELOPED AREAS. SWALES TO BE SODDED AND INCLUDE CHECK DAMS AND RIPRAP TO CONTROL RUNOFF VELOCITY AND TRANSPORT OF SEDIMENT. WHEN CONSTRUCTION IS COMPLETE THE IMPROVED PORTION OF THE SITE WILL DRAIN TO STORM WATER PONDS. THE PONDS WILL BE IN THE LOCATION OF THE TEMPORARY SEDIMENT BASINS. WHEN UPSLOPE AREAS ARE STABILIZED, THE ACCUMULATED SEDIMENT WILL BE REMOVED FROM THE SEDIMENT BASINS. THE PONDS HAVE BEEN DESIGNED BY A PROFESSIONAL ENGINEER TO LIMIT PEAK FLOW RATES FROM THE DESIGN STORM EVENT AT OR BELOW PRE−DEVELOPMENT RATES, AND CONSTRUCTION PER DETAILS SHOWN IN THE PLANS IS IMPERATIVE.

OTHER CONTROLS

WASTE DISPOSAL

WASTE MATERIALS: ALL WASTE MATERIAL WILL BE COLLECTED AND STORED IN DUMPSTERS PER LOCAL AGENCIES REGULATIONS. ALL TRASH AND CONSTRUCTION DEBRIS FROM THE SITE WILL BE DEPOSITED IN THE DUMPSTERS. THE DUMPSTERS WILL BE EMPTIED A MINIMUM OF ONCE A WEEK OR MORE OFTEN IF NECESSARY, AND THE TRASH WILL BE HAULED TO A REGISTERED LANDFILL FOR DISPOSAL. NO CONSTRUCTION MATERIALS WILL BE BURIED ON−SITE. ALL PERSONNEL WILL BE INSTRUCTED REGARDING THE CORRECT PROCEDURE FOR WASTE DISPOSAL. NOTICES STATING THESE PRACTICES WILL BE POSTED IN THE ON−SITE OFFICE TRAILER AND THE CONSTRUCTION MANGER RESPONSIBLE FOR THE DAY−TO−DAY SITE OPERATIONS, WILL BE RESPONSIBLE FOR SEEING THAT THESE PROCEDURES ARE FOLLOWED.

HAZARDOUS WASTE: ALL HAZARDOUS WASTE MATERIALS, IF ENCOUNTERED, WILL BE DISPOSED OF IN THE MANNER SPECIFIED BY LOCAL OR STATE REGULATIONS. THE CONTRACTOR WILL BE RESPONSIBLE FOR SEEING THAT THESE PRACTICES ARE FOLLOWED.

SANITARY WASTE: ALL SANITARY WASTE WILL BE COLLECTED FROM PORTABLE UNITS A MINIMUM OF THREE TIMES PER WEEK BY A LICENSED SANITARY WASTE MANAGEMENT CONTRACTOR, AS REQUIRED BY LOCAL REGULATION.

OFFSITE VEHICLE TRACKING

STABILIZED CONSTRUCTION ENTRANCES SHALL BE PROVIDED TO HELP REDUCE VEHICLE TRACKING OF SEDIMENTS. THE PAVED STREETS WILL BE CLEANED AS NEEDED TO REMOVE ANY EXCESS MUD, DIRT OR ROCK TRACKED FROM THE SITE. DUMP TRUCKS HAULING MATERIAL FROM OR TO THE SITE WILL BE COVERED WITH A TARPAULIN AT ALL TIMES.

TIMING OF CONTROL MEASURES

AS INDICATED IN THE SEQUENCE OF MAJOR ACTIVITIES, STAKED SILT BARRIERS, STABILIZED CONSTRUCTION ENTRANCES AND SEDIMENT BASINS WILL BE CONSTRUCTED PRIOR TO CLEARING OR GRADING OF ANY OTHER PORTIONS OF THE SITE. AREAS WHERE CONSTRUCTION ACTIVITY TEMPORARILY CEASES FOR MORE THAN 21 DAYS WILL BE STABILIZED WITH A TEMPORARY GRASS AND MULCH WITHIN 5 DAYS OF THE LAST DISTURBANCE. ONCE CONSTRUCTION ACTIVITY CEASES PERMANENTLY IN THAT AREA, THAT AREA WILL BE STABILIZED WITH PERMANENT SOD. AFTER THE ENTIRE SITE IS STABILIZED, THE ACCUMULATED SEDIMENT WILL BE REMOVED FROM THE TRAPS AND THE STAKED SILT BARRIERS WILL BE REMOVED.

CERTIFICATION OF COMPLIANCE WITH FEDERAL, STATE AND LOCAL REGULATIONS

THE STORM WATER POLLUTION PREVENTION PLAN REFLECTS THE SOUTHWEST FLORIDA WATER MANAGEMENT DISTRICT'S (SWFWMD) REQUIREMENTS FOR STORM WATER MANAGEMENT AND EROSION AND SEDIMENT CONTROL, AS ESTABLISHED BY THE FLORIDA ADMINISTRATIVE CODE, CHAPTER 40D−4 AND 40D−40. TO ENSURE COMPLIANCE, THIS PLAN WAS PREPARED IN ACCORDANCE WITH SWFWMD'S "BASIS OF REVIEW FOR SURFACE WATER MANAGEMENT PERMIT APPLICATIONS WITHIN THE SOUTHWEST FLORIDA WATER MANAGEMENT DISTRICT." THIS PLAN ALSO REFLECTS THE REQUIREMENTS OF THE FLORIDA DEPARTMENT OF ENVIRONMENTAL PROTECTION FOR WORK IN BRANCH 6.

MAINTENANCE INSPECTION PROCEDURES

EROSION AND SEDIMENT CONTROL INSPECTION AND MAINTENANCE PRACTICES

THESE ARE THE INSPECTION AND MAINTENANCE PRACTICES THAT SHALL BE USED TO MAINTAIN EROSION AND SEDIMENT CONTROL.

ALL CONTROL MEASURES IN DISTURBED AREAS WILL BE INSPECTED AT LEAST ONCE EACH WEEK AND WITHIN 24 HOURS OF THE END OF ANY STORM EVENT OF 0.25 INCHES OR GREATER BY A CONTRACTORS REPRESENTATIVE. (WHERE SITES HAVE BEEN FINALLY STABILIZED SUCH INSPECTIONS SHALL BE CONDUCTED AT LEAST ONCE EVERY MONTH.) ALL MEASURES WILL BE MAINTAINED IN GOOD WORKING ORDER; IF A REPAIR IS NECESSARY, IT WILL BE INITIATED WITHIN 24 HOURS OF REPORT. BUILT UP SEDIMENT WILL BE REMOVED FROM SILT FENCE WHEN IT HAS REACHED ONE−THIRD THE HEIGHT OF THE FENCE. SILT FENCE WILL BE INSPECTED REGULARLY FOR DEPTH OF SEDIMENT, TEARS, TO SEE IF THE FABRIC IS SECURELY ATTACHED TO THE FENCE POSTS, AND TO SEE THAT THE FENCE POSTS ARE FIRMLY IN THE GROUND. THE SEDIMENT BASINS WILL BE INSPECTED FOR DEPTH OF SEDIMENT, AND BUILT UP SEDIMENT WILL BE REMOVED WHEN IT REACHES 10 PERCENT OF THE DESIGN CAPACITY OR AT THE END OF THE JOB. TEMPORARY AND PERMANENT GRASSING, MULCHING AND SODDING WILL BE INSPECTED FOR BARE SPOTS, WASHOUTS, AND HEALTHY GROWTH. A MAINTENANCE INSPECTION REPORT SHALL BE MADE AFTER EACH INSPECTION BY THE CONTRACTOR AND SHALL BE KEPT IN AN ACTIVE LOG READILY AVAILABLE AT THE JOB SITE CONSTRUCTION TRAILER. THE SITE SUPERINTENDENT WILL SELECT INDIVIDUALS WHO WILL BE RESPONSIBLE FOR MAINTENANCE AND REPAIR ACTIVITIES. FILLING OUT THE INSPECTION AND MAINTENANCE REPORT WILL BE BY THE CONTRACTOR. PERSONNEL SELECTED FOR MAINTENANCE RESPONSIBILITIES WILL RECEIVE TRAINING FROM THE SITE SUPERINTENDENT. THEY WILL BE TRAINED IN ALL MAINTENANCE PRACTICES NECESSARY FOR KEEPING THE EROSION AND SEDIMENT CONTROLS USED ON−SITE IN GOOD WORKING ORDER.

NON−STORM WATER DISCHARGES

IT IS EXPECTED THAT THE FOLLOWING NON−STORM WATER DISCHARGES WILL OCCUR FROM THE SITE DURING THE CONSTRUCTION PERIOD:

WATER FROM FIRE FIGHTING ACTIVITIES, FIRE HYDRANT FLUSHING, WATER LINE FLUSHING, WATER USED TO SPRAY OFF LOOSE SOILS FROM VEHICLES, DUST CONTROL, PAVEMENT WASH WATERS (WHERE NO SPILLS OR LEAKS OF TOXIC OR HAZARDOUS MATERIALS HAVE OCCURRED). ALL NON−STORM WATER DISCHARGES WILL BE DIRECTED TO THE SEDIMENT BASIN PRIOR TO DISCHARGE.

GROUNDWATER DEWATERING ACTIVITIES ARE NOT COVERED BY THIS PERMIT. THE CONTRACTOR MUST APPLY FOR COVERAGE UNDER THE GENERIC PERMIT FOR THE DISCHARGE OF PRODUCED GROUNDWATER FROM ANY NON−CONTAMINATED SITE ACTIVITY PURSUANT TO 62−621.300 (2), F.A.C.

INVENTORY FOR POLLUTION PREVENTION PLAN

THE MATERIALS OR SUBSTANCES LISTED BELOW ARE EXPECTED, BUT NOT LIMITED, TO BE PRESENT ON−SITE DURING CONSTRUCTION:

CONCRETE	FERTILIZERS
DETERGENTS	PETROLEUM BASED PRODUCTS AND FUELS
PAINTS (ENAMEL AND LATEX)	CLEANING SOLVENTS
METAL STUDS	WOOD
GLASS	MASONRY BLOCK
TAR	ROOFING SHINGLES
SAND	STONE

SPILL PREVENTION

MATERIAL MANAGEMENT PRACTICES

THE FOLLOWING ARE THE MATERIAL MANAGEMENT PRACTICES THAT WILL BE USED TO REDUCE THE RISK OF SPILLS OR OTHER ACCIDENTAL EXPOSURE OF MATERIALS AND SUBSTANCES TO STORM WATER RUNOFF.

GOOD HOUSEKEEPING:

THE FOLLOWING GOOD HOUSEKEEPING PRACTICES SHALL BE FOLLOWED ON−SITE DURING THE CONSTRUCTION PROJECT.

AN EFFORT SHALL BE MADE TO STORE ONLY ENOUGH PRODUCT REQUIRED TO DO THE JOB. ALL MATERIALS STORED ON−SITE SHALL BE STORED IN A NEAT, ORDERLY MANNER IN THEIR APPROPRIATE CONTAINERS AND, IF POSSIBLE, UNDER A ROOF OR OTHER CONTAINED ENCLOSURE. PRODUCTS SHALL BE KEPT IN THEIR ORIGINAL MANUFACTURER'S LABELED CONTAINERS. SUBSTANCES SHALL NOT BE MIXED WITH ONE ANOTHER UNLESS RECOMMENDED BY THE MANUFACTURER. WHENEVER POSSIBLE, ALL OF A PRODUCT SHALL BE USED UP BEFORE DISPOSING OF THE CONTAINER. MANUFACTURERS' RECOMMENDATIONS FOR PROPER USE AND DISPOSAL SHALL BE FOLLOWED. THE SITE SUPERINTENDENT SHALL INSPECT DAILY TO ENSURE PROPER USE AND DISPOSAL OF MATERIALS ON−SITE.

HAZARDOUS PRODUCTS:

THESE PRACTICES ARE USED TO REDUCE THE RISKS ASSOCIATED WITH HAZARDOUS MATERIALS.

PRODUCTS SHALL BE KEPT IN ORIGINAL CONTAINERS UNLESS THEY ARE NOT RESEALABLE. ORIGINAL LABELS AND MATERIAL SAFETY DATA SHALL BE RETAINED; THEY CONTAIN IMPORTANT PRODUCT INFORMATION. IF SURPLUS PRODUCT MUST BE DISPOSED OF, MANUFACTURERS' OR LOCAL AND STATE RECOMMENDED METHODS OF PROPER DISPOSAL SHALL BE FOLLOWED.

THE FOLLOWING PRODUCT SPECIFIC PRACTICES WILL BE FOLLOWED ON−SITE:

PETROLEUM PRODUCTS:

ALL ON−SITE VEHICLES WILL BE MONITORED FOR LEAKS AND RECEIVE REGULAR PREVENTIVE MAINTENANCE TO REDUCE THE CHANCE OF LEAKAGE. PETROLEUM PRODUCTS WILL BE STORED IN TIGHTLY SEALED CONTAINERS WHICH ARE CLEARLY LABELED. ANY ASPHALT SUBSTANCES USED ON−SITE WILL BE APPLIED ACCORDING TO THE MANUFACTURER'S RECOMMENDATIONS.

FERTILIZERS:

FERTILIZERS USED WILL BE APPLIED ONLY IN THE MINIMUM AMOUNTS RECOMMENDED BY THE MANUFACTURER. ONCE APPLIED, FERTILIZER WILL BE WORKED INTO THE SOIL TO LIMIT EXPOSURE TO STORM WATER. STORAGE WILL BE IN A COVERED SHED. THE CONTENTS OF ANY PARTIALLY USED BAGS OF FERTILIZER WILL BE TRANSFERRED TO A SEALABLE PLASTIC BIN TO AVOID SPILLS.

PAINTS:

ALL CONTAINERS WILL BE TIGHTLY SEALED AND STORED WHEN NOT REQUIRED FOR USE. EXCESS PAINT WILL NOT BE DISCHARGED TO THE STORM SEWER SYSTEM BUT WILL BE PROPERLY DISPOSED OF ACCORDING TO MANUFACTURERS' INSTRUCTIONS OR STATE AND LOCAL REGULATIONS.

CONCRETE TRUCKS:

CONTRACTOR SHALL DESIGNATE AN AREA FOR DISCHARGE OF SURPLUS CONCRETE OR DRUM WASH WATER AND SHALL INSTALL A CONTAINMENT BERM AROUND THIS AREA TO PREVENT RUNOFF TO THE REMAINDER OF THE SITE. HARD DEBRIS SHALL BE DISPOSED OF BY CONTRACTOR UPON COMPLETION OF THE PROJECT.

SPILL CONTROL PRACTICES

IN ADDITION TO THE GOOD HOUSEKEEPING AND MATERIAL MANAGEMENT PRACTICES DISCUSSED IN THE PREVIOUS SECTIONS OF THIS PLAN, THE FOLLOWING PRACTICES SHALL BE FOLLOWED FOR SPILL PREVENTION AND CLEANUP:

MANUFACTURERS' RECOMMENDED METHODS FOR SPILL CLEANUP WILL BE CLEARLY POSTED AND SITE PERSONNEL WILL BE MADE AWARE OF THE PROCEDURES AND THE LOCATION OF THE INFORMATION AND CLEANUP SUPPLIES.

MATERIALS AND EQUIPMENT NECESSARY FOR SPILL CLEANUP WILL BE KEPT IN THE MATERIAL STORAGE AREA ON−SITE. EQUIPMENT AND MATERIALS WILL INCLUDE, BUT NOT BE LIMITED TO, BROOMS, DUST PANS, MOPS, RAGS, GLOVES, GOGGLES, KITTY LITTER, SAND, SAWDUST, AND PLASTIC AND METAL TRASH CONTAINERS SPECIFICALLY FOR THIS PURPOSE.

ALL SPILLS WILL BE CLEANED UP IMMEDIATELY AFTER DISCOVERY.

THE SPILL AREAS WILL BE KEPT WELL VENTILATED AND PERSONNEL WILL WEAR APPROPRIATE PROTECTIVE CLOTHING TO PREVENT INJURY FROM CONTACT WITH A HAZARDOUS SUBSTANCE.

SPILLS OF TOXIC OR HAZARDOUS MATERIAL WILL BE REPORTED TO THE APPROPRIATE STATE OR LOCAL GOVERNMENT AGENCY, REGARDLESS OF THE SIZE.

THE SPILL PREVENTION PLAN WILL BE ADJUSTED TO INCLUDE MEASURES TO PREVENT THIS TYPE OF SPILL FROM REOCCURRING AND HOW TO CLEAN UP THE SPILL IF THERE IS ANOTHER ONE. A DESCRIPTION OF THE SPILL,WHAT CAUSED IT, AND THE CLEANUP MEASURES WILL ALSO BE INCLUDED.

THE SITE SUPERINTENDENT RESPONSIBLE FOR THE DAY−TO−DAY SITE OPERATIONS, WILL BE THE SPILL PREVENTION AND CLEANUP COORDINATOR. HE WILL DESIGNATE OTHER SITE PERSONNEL WHO WILL RECEIVE SPILL PREVENTION AND CLEANUP TRAINING. THESE INDIVIDUALS WILL EACH BECOME RESPONSIBLE FOR A PARTICULAR PHASE OF PREVENTION AND CLEANUP. THE NAMES OF RESPONSIBLE SPILL PERSONNEL WILL BE POSTED IN THE MATERIAL STORAGE AREA AND IN THE OFFICE TRAILER ON−SITE.

NOTICE OF INTENT (NOI) / NOTICE OF TERMINATION (NOT)

- THIS NOTICE OF INTENT (NOI) FORM IS TO BE COMPLETED AND SUBMITTED TO THE FLORIDA DEPARTMENT OF ENVIRONMENTAL PROTECTION (FDEP) BEFORE USE OF THE GENERIC PERMIT FOR STORMWATER DISCHARGE FROM LARGE AND SMALL CONSTRUCTION ACTIVITIES PROVIDED IN SUBSECTION 62−621.300(4), F.A.C.
- A NOTICE OF TERMINATION WILL BE SUBMITTED TO EPA AFTER THE CONSTRUCTION HAS BEEN COMPLETED AND THE SITE HAS UNDERGONE FINAL STABILIZATION.

POLLUTION PREVENTION PLAN CERTIFICATION

I CERTIFY UNDER PENALTY OF LAW THAT THESE CONSTRUCTION PLANS, THIS DOCUMENT AND ALL ATTACHMENTS WERE PREPARED UNDER MY DIRECTION OR SUPERVISION IN ACCORDANCE WITH A SYSTEM, AS SHOWN ON THESE CONSTRUCTION PLANS, DESIGNED TO ASSURE THAT APPROPRIATE POLLUTION PREVENTION MEASURES ARE IMPLEMENTED DURING CONSTRUCTION AND TO ASSURE THAT THE QUALIFIED PERSONNEL PROPERLY GATHERED AND EVALUATED THE INFORMATION SUBMITTED. BASED ON MY INQUIRY OF THE PERSON OR PERSONS WHO MANAGE THE SYSTEM, OR THE PERSONS DIRECTLY RESPONSIBLE FOR GATHERING THE INFORMATION, THE INFORMATION SUBMITTED IS, TO THE BEST OF MY KNOWLEDGE AND BELIEF, TRUE, ACCURATE AND COMPLETE. I AM AWARE THAT THERE ARE SIGNIFICANT PENALTIES FOR SUBMITTING FALSE INFORMATION, INCLUDING THE POSSIBILITY OF FINE AND IMPRISONMENT FOR KNOWING VIOLATIONS.

OWNER:

SIGNED: ____________

NAME AND TITLE: PARKER HIRONS,
AUTHORIZED AGENT

COMPANY: LENNAR HOMES, LLC

ADDRESS: 4600 WEST CYPRESS ST., SUITE 200
TAMPA, FLORIDA 33607

DATE: ____________

CONTRACTOR'S CERTIFICATION

I CERTIFY UNDER PENALTY OF LAW THAT I UNDERSTAND THE TERMS AND CONDITIONS OF THE GENERIC STORM WATER PERMIT ISSUED PURSUANT TO SECTION 403.0885, F.S., THAT AUTHORIZES THE STORM WATER DISCHARGES ASSOCIATED WITH INDUSTRIAL ACTIVITY FROM THE CONSTRUCTION SITE IDENTIFIED AS PART OF THIS CERTIFICATION.

SIGNATURE	FOR	RESPONSIBLE FOR
NAME: TITLE: DATE:	COMPANY: ADDRESS: PHONE:	GENERAL CONTRACTOR
NAME: TITLE: DATE:	COMPANY: ADDRESS: PHONE:	TEMPORARY AND PERMANENT STABILIZATION
NAME: TITLE: DATE:	COMPANY: ADDRESS: PHONE:	STABILIZED CONSTRUCTION ENTRANCE, EARTH DIKES, SEDIMENT BASIN

Q:\CIVIL\5163\905\000\Production\Drawings\PLN-CPPP.dwg , February 11, 2015 10:31 AM, King Engineering Associate Inc.
© COPYRIGHT 2014 KING ENGINEERING ASSOCIATES, INC. DRAWINGS AND CONCEPTS MAY NOT BE USED OR REPRODUCED WITHOUT WRITTEN PERMISSION CONSENT IS HEREBY GRANTED SPECIFICALLY TO GOVERNMENTAL AGENCIES TO REPRODUCE THIS DOCUMENT IN COMPLIANCE WITH F.S. CHAPTER 119.

DESIGNED	JLW
DRAWN	JLW
CHECKED	TLT/AGK
Q.C.	LFK

THE SIGNATURE OF THE QUALITY CONTROL OFFICER IN THIS SPACE INDICATES THAT ALL REQUIRED PERMITS HAVE BEEN OBTAINED AND THAT CONSTRUCTION IS AUTHORIZED TO COMMENCE.
MER 2/5/15

King ENGINEERING ASSOCIATES, INC.
4921 Memorial Highway
One Memorial Center, Suite 300
Tampa, Florida 33634
Phone 813 880-8881
Fax 813 880-8882
www.kingengineering.com
Engineering License #2610

THE OAKS AT SHADY CREEK, PHASE 2
FOR
LENNAR HOMES, LLC
4600 WEST CYPRESS ST. SUITE 200
TAMPA, FL. 34683
813-574-5653

CONSTRUCTION POLLUTION PREVENTION PLAN

NO.	DATE	DESCRIPTION	APP'D BY

JOB NO.	5163-905-000
DATE:	10-28-2014
SCALE:	AS SHOWN
SHEET NO.	C1.04

HC FINAL SET
FEB. 11, 2015

Q:\CIVIL\5163\905\000\Production\Drawings\PLN-DSP-01.dwg , February 11, 2015 10:31 AM, King Engineering Associate Inc.
© COPYRIGHT 2014 KING ENGINEERING ASSOCIATES, INC. DRAWINGS AND CONCEPTS MAY NOT BE USED OR REPRODUCED WITHOUT WRITTEN PERMISSION
COVER IS HEREBY GRANTED SPECIFICALLY TO GOVERNMENTAL AGENCIES TO REPRODUCE THIS DOCUMENT IN CONFORMANCE WITH F.S. CHAPTER 119.

DESIGNED	THE SIGNATURE OF THE QUALITY CONTROL OFFICER IN THIS SPACE INDICATES THAT ALL REQUIRED PERMITS HAVE BEEN OBTAINED AND THAT CONSTRUCTION IS AUTHORIZED TO COMMENCE.
JLW	
DRAWN: JLW	
CHECKED: TLT/AGK	
Q.C. TLT/AGK	MER 2/5/15

King ENGINEERING ASSOCIATES, INC.
4921 Memorial Highway
One Memorial Center, Suite 300
Tampa, Florida 33634
Phone 813 880-8881
Fax 813 880-8882
www.kingengineering.com
Engineering License #2610

THE OAKS AT SHADY CREEK, PHASE 2

FOR

LENNAR HOMES, LLC
4600 WEST CYPRESS ST. SUITE 200
TAMPA, FL. 34683
813-574-5653

LIMITS OF CONSTRUCTION PLAN

NO.	DATE	DESCRIPTION	APP'D BY

JOB NO.	SHEET NO.
5163-905-000	C2.00
DATE: 10-28-2014	
SCALE: AS SHOWN	

HC FINAL SET
FEB. 11, 2015

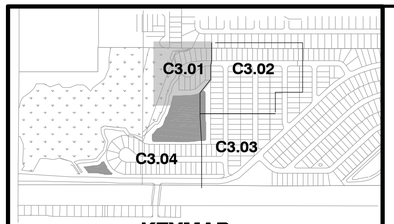

KEYMAP

SIGN LEGEND

NO.	SYMBOL	DESCRIPTION	REGULATORY NO.	SIZE
①	STOP	30" STOP SIGN	R1-1	30"X30"
②	SPEED LIMIT 25	25 MPH SPEED LIMIT *	R2-1	24"x30"
③	STREET	STREET NAME	SEE HILLSBOROUGH CO. TTM DETAIL TD-12	

* INCLUDE "UNLESS OTHERWISE POSTED" PLAQUE 24"x30" WITH BLACK LETTERS ON WHITE BACKGROUND

ON-SITE SIGN & PAVEMENT MARKING NOTES

1. ALL SIGNS AND PAVEMENT MARKINGS SHALL CONFORM TO THE U.S. DEPARTMENT OF TRANSPORTATION'S "MANUAL ON UNIFORM TRAFFIC CONTROL DEVICES", 2009 EDITION, AND THE FLORIDA DEPARTMENT OF TRANSPORTATION'S "DESIGN STANDARDS FOR DESIGN, CONSTRUCTION, MAINTENANCE AND UTILITY OPERATIONS ON THE STATE HIGHWAY SYSTEM", 2014 EDITION.
2. ALL PAVEMENT MARKINGS SHALL BE LEAD-FREE, NON-SOLVENT BASED THERMOPLASTIC, UNLESS NOTED OTHERWISE, FOR THE FIRST LIFT OF ASPHALT AND THE FINAL LIFT OF ASPHALT. RPM'S SHALL BE INSTALLED PER FDOT STANDARD INDEX 17352
3. ALL PAVEMENT MARKINGS TO BE REMOVED SHALL BE PERFORMED BY HYDRO BLASTING.
4. THE SIGN LOCATIONS SHOWN ARE APPROXIMATE AND MAY REQUIRE FIELD ADJUSTMENTS AS DIRECTED BY THE ENGINEER.
5. IT SHALL BE THE CONTRACTORS RESPONSIBILITY TO VERIFY THE LENGTH OF THE COLUMN SUPPORTS IN THE FIELD PRIOR TO FABRICATION.
6. THE CONTRACTOR SHALL USE U-CHANNEL GALVANIZED, 2.5 LB/FT, FOR ALL POST MOUNTED SIGNS. SEE HC TTM STANDARD DETAILS FOR ADDITIONAL SIGN RELATED DETAILS.
7. ALL PARKING STALLS SHALL BE PAINTED IN ACCORDANCE WITH THE CONSTRUCTION PLANS AND/OR SPECIFICATIONS.
8. LOCATION OF STOP BARS IS TO BE PER SECTION 3B.16 OF THE MUTCD.
9. LOCATION OF SIGNS IS TO BE PER SECTION 2A.18 THROUGH 2A.20 OF THE MUTCD.
10. BIKE LANE SYMBOLS SHALL BE BE PREFORMED THERMOPLASTIC

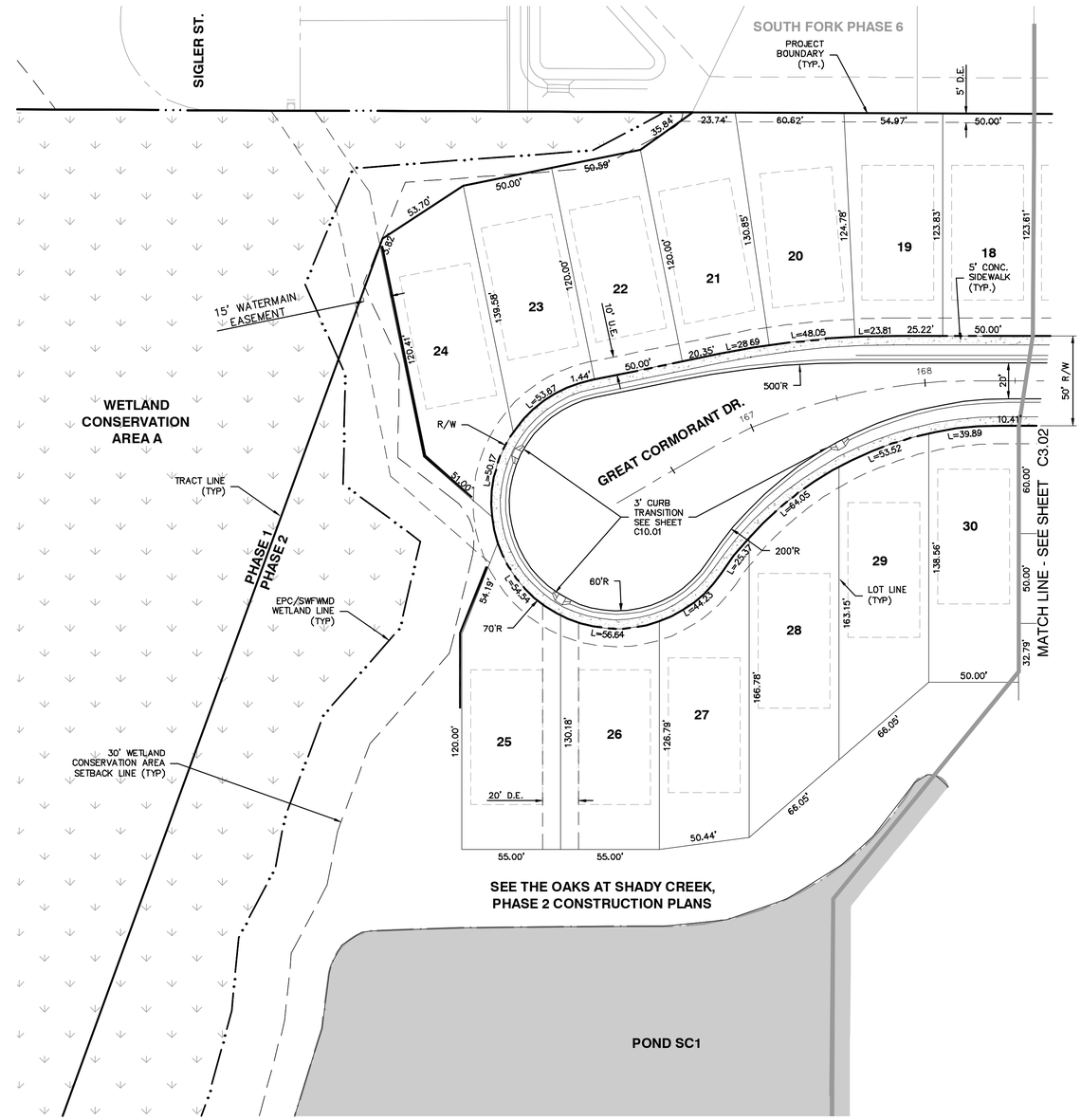

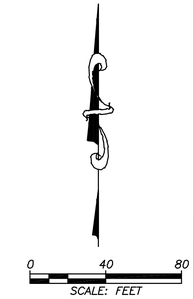

Q:\CIVIL\5163\905\000\Production\Drawings\PLN-SPM-01.dwg , February 11, 2015 10:31 AM, King Engineering Associate Inc.
© COPYRIGHT 2014 KING ENGINEERING ASSOCIATES, INC. DRAWINGS AND CONCEPTS MAY NOT BE USED OR REPRODUCED WITHOUT WRITTEN PERMISSION OTHER THAN FOR THE PROJECT SPECIFICALLY CONTEMPLATED. THIS DOCUMENT IS COPYRIGHTED UNDER U.S. CODE OF LAWS, TITLE 17, CHAPTER 1101.

DESIGNED JLW
DRAWN JLW
CHECKED TLT/AGK
Q.C. LGK

THE SIGNATURE OF THE QUALITY CONTROL OFFICER IN THIS SPACE INDICATES THAT ALL REQUIRED PERMITS HAVE BEEN OBTAINED AND THAT CONSTRUCTION IS AUTHORIZED TO COMMENCE.
MER 2/5/15

King ENGINEERING ASSOCIATES, INC.
4921 Memorial Highway
One Memorial Center, Suite 300
Tampa, Florida 33634
Phone 813 880-8881
Fax 813 880-8882
www.kingengineering.com
Engineering License #2610

THE OAKS AT SHADY CREEK, PHASE 2

FOR

LENNAR HOMES, LLC
4600 WEST CYPRESS ST. SUITE 200
TAMPA, FL. 34683
813-574-5653

SIGNING, PAVEMENT MARKING AND DIMENSION PLAN

NO.	DATE	DESCRIPTION	APPD BY

JOB NO. 5163-905-000
DATE: 10-28-2014
SCALE: AS SHOWN
SHEET NO. C3.01
HC FINAL SET
FEB. 11, 2015

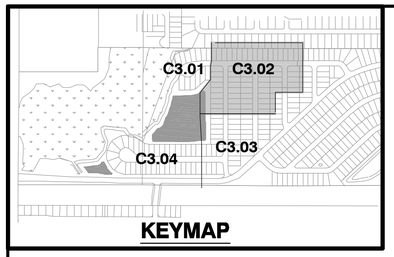

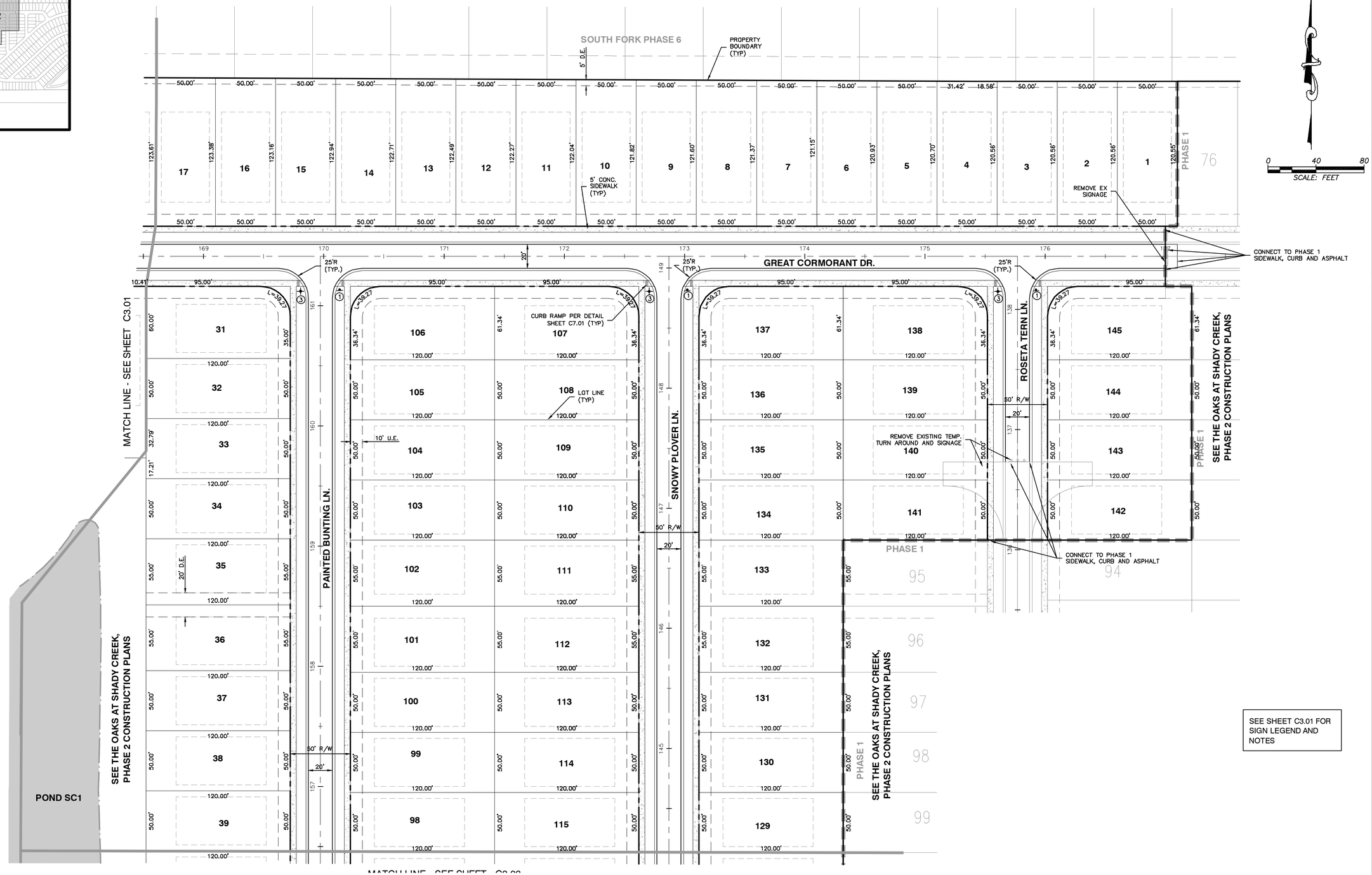

SEE SHEET C3.01 FOR SIGN LEGEND AND NOTES

© COPYRIGHT 2014 KING ENGINEERING ASSOCIATES, INC. DRAWINGS AND CONCEPTS MAY NOT BE USED OR REPRODUCED WITHOUT WRITTEN PERMISSION CONTACT IS MADE IN WRITING FOR SPECIFICALLY TO CONFIDENTIAL AGENCIES TO REPRODUCE THE DOCUMENT IN COMPLIANCE WITH F.S. CHAPTER 119.

Q:\CIVIL\5163\905.000\Production\Drawings\PLN-SPM-02.dwg February 11, 2015 10:32 AM King Engineering Associate Inc.

DESIGNED	JLW
DRAWN	JLW
CHECKED	TLT/AGK
Q.C.	LFK

THE SIGNATURE OF THE QUALITY CONTROL OFFICER IN THIS SPACE INDICATES THAT ALL REQUIRED PERMITS HAVE BEEN OBTAINED AND THAT CONSTRUCTION IS AUTHORIZED TO COMMENCE.

MER 2/5/15

King ENGINEERING ASSOCIATES, INC.
4921 Memorial Highway
One Memorial Center, Suite 300
Tampa, Florida 33634
Phone 813 880-8881
Fax 813 880-8882
www.kingengineering.com
Engineering License #2610

THE OAKS AT SHADY CREEK, PHASE 2

FOR

LENNAR HOMES, LLC
4600 WEST CYPRESS ST. SUITE 200
TAMPA, FL. 34683
813-574-5653

SIGNING, PAVEMENT MARKING AND DIMENSION PLAN

NO.	DATE	DESCRIPTION	APPD BY

JOB NO. 5163-905-000
DATE: 10-28-2014
SCALE: AS SHOWN
SHEET NO. C3.02
HC FINAL SET
FEB. 11, 2015

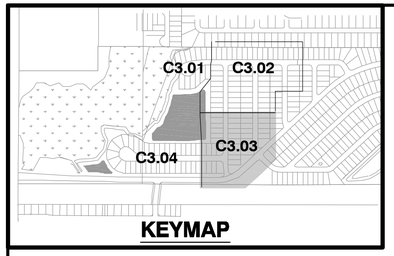

SEE SHEET C3.01 FOR SIGN LEGEND AND NOTES

Q:\CIVIL\5163\905\000\Production\Drawings\PLN-SPM\03.dwg , February 11, 2015 10:32 AM , King Engineering Associate Inc.

© COPYRIGHT 2014 KING ENGINEERING ASSOCIATES, INC. DRAWINGS AND CONCEPTS MAY NOT BE USED OR REPRODUCED WITHOUT WRITTEN PERMISSION
CONTACT KE PERSONNEL WHO ARE SPECIALLY TO CONFIDENTIAL AGREED TO REPRODUCE THIS DOCUMENT IN CONFIDENCE UNDER U.S. CHAPTER 110.

DESIGNED	JLW
DRAWN	JLW
CHECKED	TLT/AGK
Q.C.	LGK

THE SIGNATURE OF THE QUALITY CONTROL OFFICER IN THIS SPACE INDICATES THAT ALL REQUIRED PERMITS HAVE BEEN OBTAINED AND THAT CONSTRUCTION IS AUTHORIZED TO COMMENCE.

MER 2/5/15

King ENGINEERING ASSOCIATES, INC.
4921 Memorial Highway
One Memorial Center, Suite 300
Tampa, Florida 33634
Phone 813 880-8881
Fax 813 880-8882
www.kingengineering.com
Engineering License #2610

THE OAKS AT SHADY CREEK, PHASE 2

FOR

LENNAR HOMES, LLC
4600 WEST CYPRESS ST. SUITE 200
TAMPA, FL. 34683
813-574-5653

SIGNING, PAVEMENT MARKING AND DIMENSION PLAN

NO.	DATE	DESCRIPTION	APP'D BY

JOB NO. 5163-905-000
DATE: 10-28-2014
SCALE: AS SHOWN
SHEET NO. C3.03

HC FINAL SET
FEB. 11, 2015

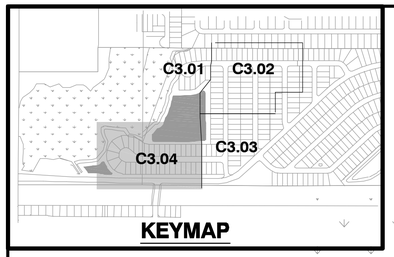

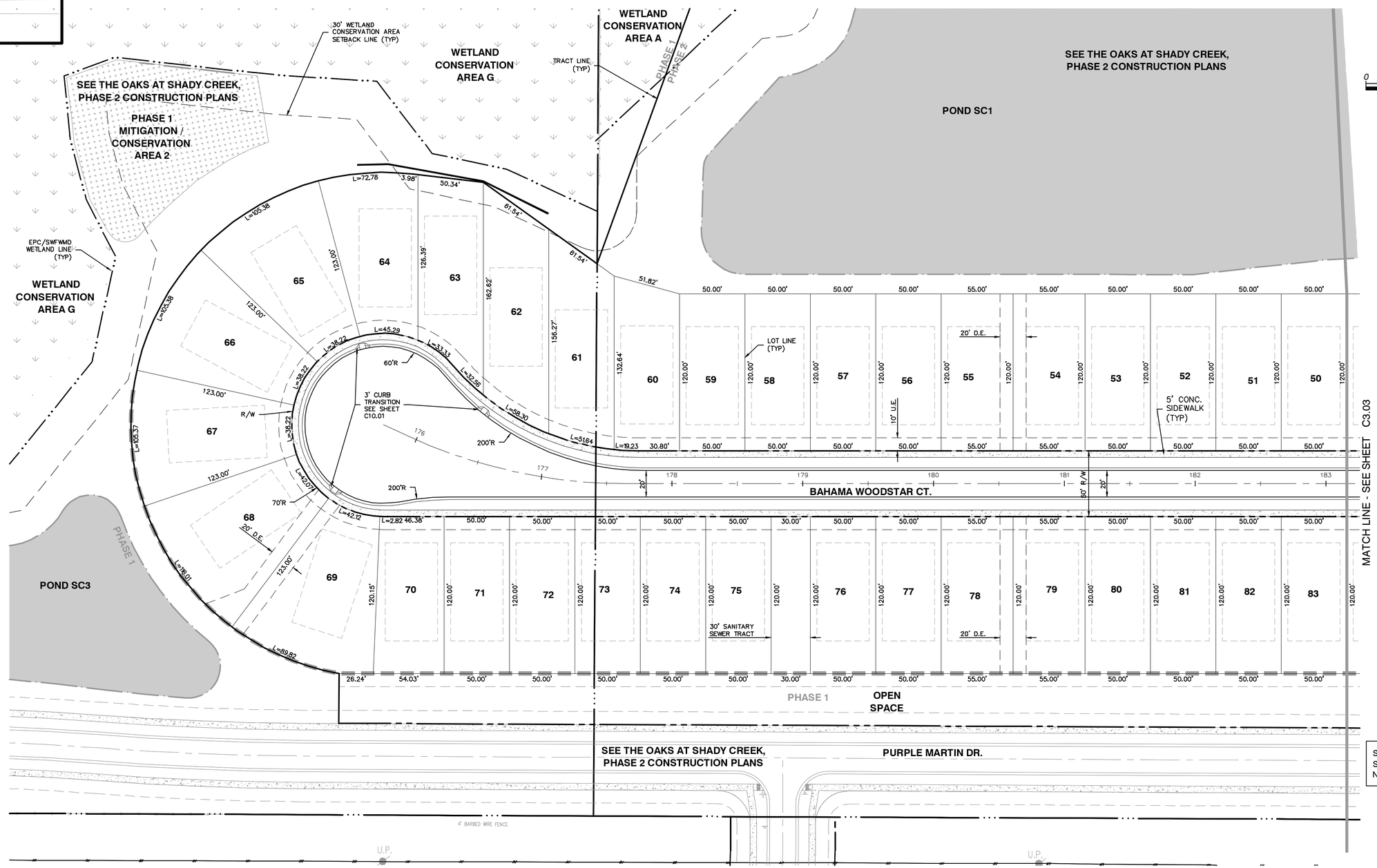

SEE SHEET C3.01 FOR SIGN LEGEND AND NOTES

0 40 80
SCALE: FEET

Q:\CIV\L5163\905\000\ProductionDrawings\PLN\SPM\04.dwg , February 11, 2015 10:33 AM , King Engineering Associate Inc.
© COPYRIGHT 2014 KING ENGINEERING ASSOCIATES, INC. DRAWINGS AND CONCEPTS MAY NOT BE USED OR REPRODUCED WITHOUT WRITTEN PERMISSION
CONTACT IS REQUIRED FOR ANY USE OF DRAWINGS, TO REPRODUCE THE DOCUMENT IS FORBIDDEN UNDER U.S. COPYRIGHT LAW.

DESIGNED JLW
DRAWN JLW
CHECKED TLT/AGK
Q.C. LFK

THE SIGNATURE OF THE QUALITY CONTROL OFFICER IN THIS SPACE INDICATES THAT ALL REQUIRED PERMITS HAVE BEEN OBTAINED AND THAT CONSTRUCTION IS AUTHORIZED TO COMMENCE.

MER 2/15/15

King ENGINEERING ASSOCIATES, INC.
4921 Memorial Highway
One Memorial Center, Suite 300
Tampa, Florida 33634
Phone 813 880-8881
Fax 813 880-8882
www.kingengineering.com
Engineering License #2610

THE OAKS AT SHADY CREEK, PHASE 2

FOR

LENNAR HOMES, LLC
4600 WEST CYPRESS ST. SUITE 200
TAMPA, FL. 34683
813-574-5653

SIGNING, PAVEMENT MARKING AND DIMENSION PLAN

NO.	DATE	DESCRIPTION	APP'D BY

JOB NO. 5163-905-000
DATE: 10-28-2014
SCALE: AS SHOWN
SHEET NO. C3.04
HC FINAL SET
FEB. 11, 2015

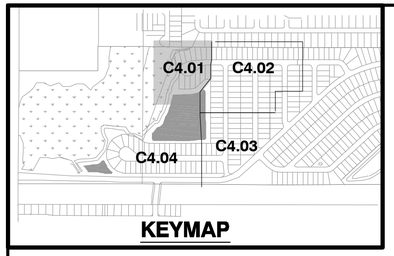

NOTE

- ALL ELEVATIONS REFER TO NAVD1988 DATUM CONVERSION: NAVD1988 = NGVD1929 −0.905 FEET
- SEE SHEET C4.04 FOR HC WETLAND BUFFER IMPACT AREAS
- ALL WALLS ARE BY OTHERS, SEE SHEET C1.02 FOR NOTES/DETAILS
- PROJECT RESIDES IN FEMA FLOOD ZONE "X" PER FIRM COMMUNITY PANEL NO. 12057C 0515H, DATED 8-28-2008
- FOR LOT GRADING DETAILS SEE SHEET C4.01

HILLSBOROUGH CO.
WETLAND BUFFER IMPACTS
A-1=0.04 AC.
A-2=0.02 AC.
C-1=0.01 AC.
TOTAL BUFFER IMPACTS = 0.07 AC.

WETLAND SETBACK ENCROACHMENT COMPENSATION AREA
A-1 = 0.07 AC.

SEE SHEET C9.01 FOR ENHANCEMENT PLANTING DETAILS

STRUCTURE DETAIL INFORMATION	
STRUCTURE NAME	DETAIL LOCATION
TYPE I INLET	HILLSBOROUGH COUNTY TYPE I INLET (SEE SHEET C10.01) FOR DETAILS
TYPE II INLET	HILLSBOROUGH COUNTY TYPE II INLET (SEE SHEET C10.01) FOR DETAILS
FDOT TYPE V INLET	FDOT TYPE V INLET PER FDOT INDEX 221 (SEE SHEET C10.01) FOR DETAILS

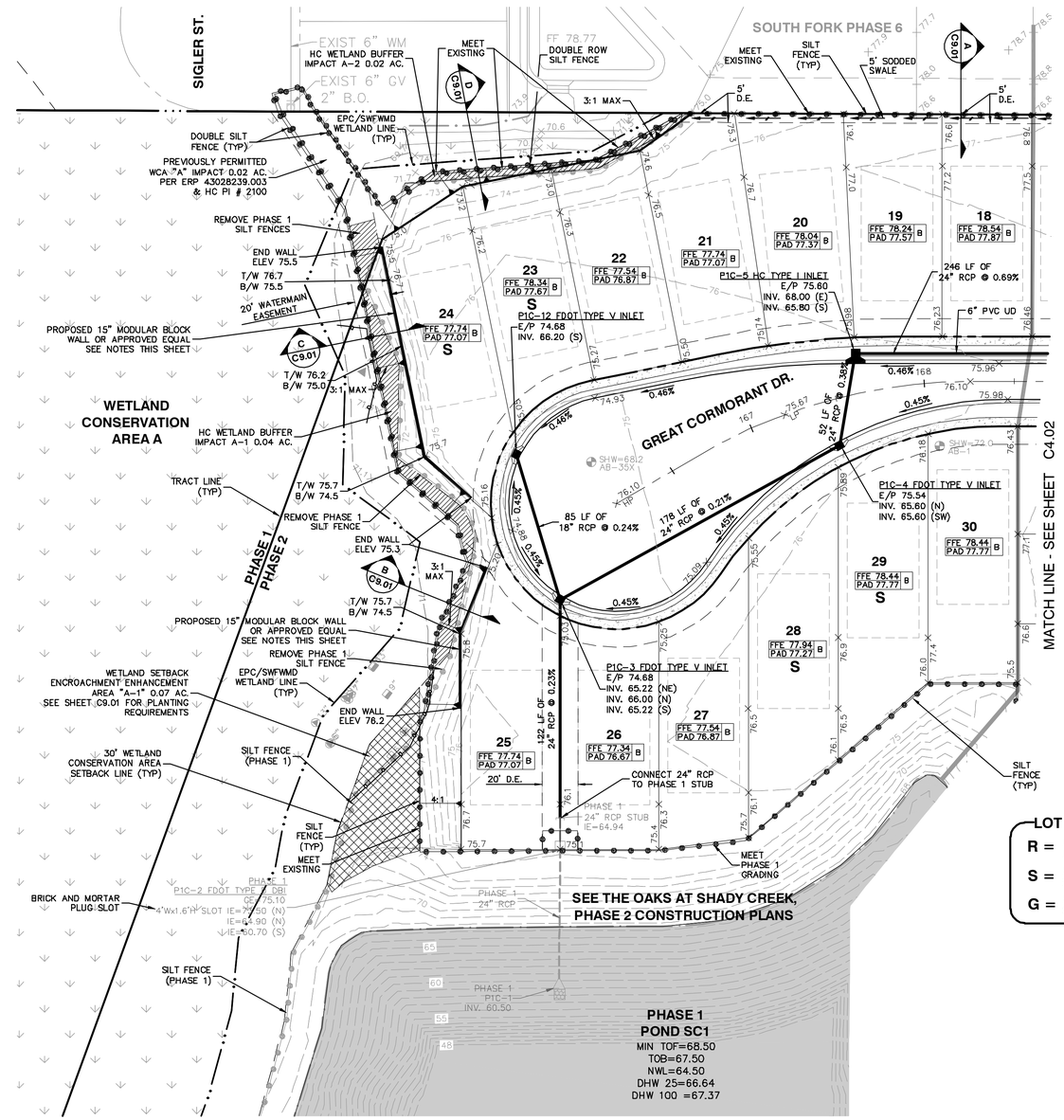

LOT CONSTRUCTION NOTES

R = LOT RESTRICTED BY DRIVEWAY LOCATION OR BUILDING SIZE

S = BUILDING MAY REQUIRE STEMWALL CONSTRUCTION

G = BUILDING MAY REQUIRE GARAGE TO HAVE STEP DOWN

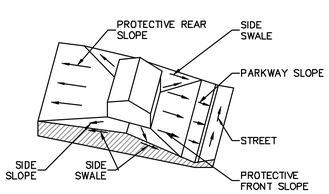

LOT GRADING TYPE B DRAINAGE TO BOTH STREET AND REAR LOT LINE

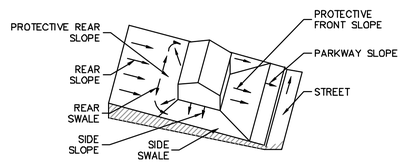

LOT GRADING TYPE A ALL DRAINAGE TO STREET

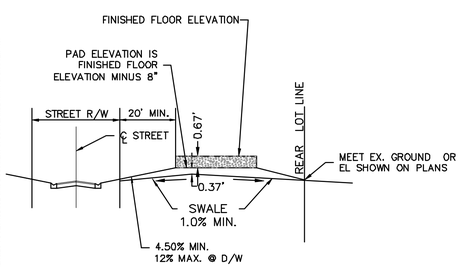

GRADING TYPE B*

*NOTE:
ALL FIRST FLOOR ELEVATIONS (FF) SHALL BE A MIN. OF 6" ABOVE THE BASE FLOOD ELEVATION (USE THE HIGHEST BFE BASED ON FEMA/FLOOD STUDY) OR AS SHOWN ON PLANS.

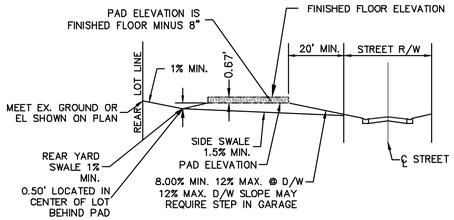

GRADING TYPE A*

*NOTE:
ALL FIRST FLOOR ELEVATIONS (FF) SHALL BE A MIN. OF 6" ABOVE THE BASE FLOOD ELEVATION (USE THE HIGHEST BFE BASED ON FEMA/FLOOD STUDY) OR AS SHOWN ON PLANS.

LOT GRADING DETAILS

© COPYRIGHT 2014 KING ENGINEERING ASSOCIATES, INC. DRAWINGS AND CONCEPTS MAY NOT BE USED OR REPRODUCED WITHOUT WRITTEN PERMISSION CONTACT IS MADE IF DRAWN ED SPECIFICALLY TO CONFORM WITH, HOWEVER TO REPRODUCE THIS DOCUMENT IS CONSIDERED AS WITH F.S. CHAPTER 119.

Q:\CIVIL\5163\905\000\Production\Drawings\PLN\PGD-01.dwg February 11, 2015 10:33 AM King Engineering Associate Inc.

DESIGNED JLW
DRAWN JLW
CHECKED TLT/AGK
Q.C. LFK

THE SIGNATURE OF THE QUALITY CONTROL OFFICER IN THIS SPACE INDICATES THAT ALL REQUIRED PERMITS HAVE BEEN OBTAINED AND THAT CONSTRUCTION IS AUTHORIZED TO COMMENCE.
MER 2/5/15

King ENGINEERING ASSOCIATES, INC.
4921 Memorial Highway
One Memorial Center, Suite 300
Tampa, Florida 33634
Phone 813 880-8881
Fax 813 880-8882
www.kingengineering.com
Engineering License #2610

THE OAKS AT SHADY CREEK, PHASE 2
FOR
LENNAR HOMES, LLC
4600 WEST CYPRESS ST. SUITE 200
TAMPA, FL. 34683
813-574-5653

PAVING, GRADING AND DRAINAGE PLAN

NO.	DATE	DESCRIPTION	APPD BY

JOB NO. 5163-905-000
DATE: 10-28-2014
SCALE: AS SHOWN
SHEET NO. C4.01
HC FINAL SET
FEB. 11, 2015

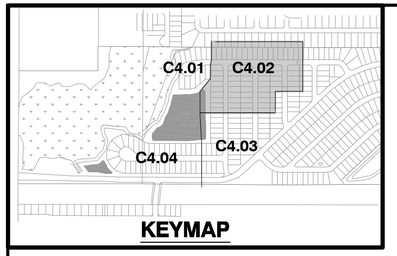

LOT CONSTRUCTION NOTES

- R = LOT RESTRICTED BY DRIVEWAY LOCATION OR BUILDING SIZE
- S = BUILDING MAY REQUIRE STEMWALL CONSTRUCTION
- G = BUILDING MAY REQUIRE GARAGE TO HAVE STEP DOWN

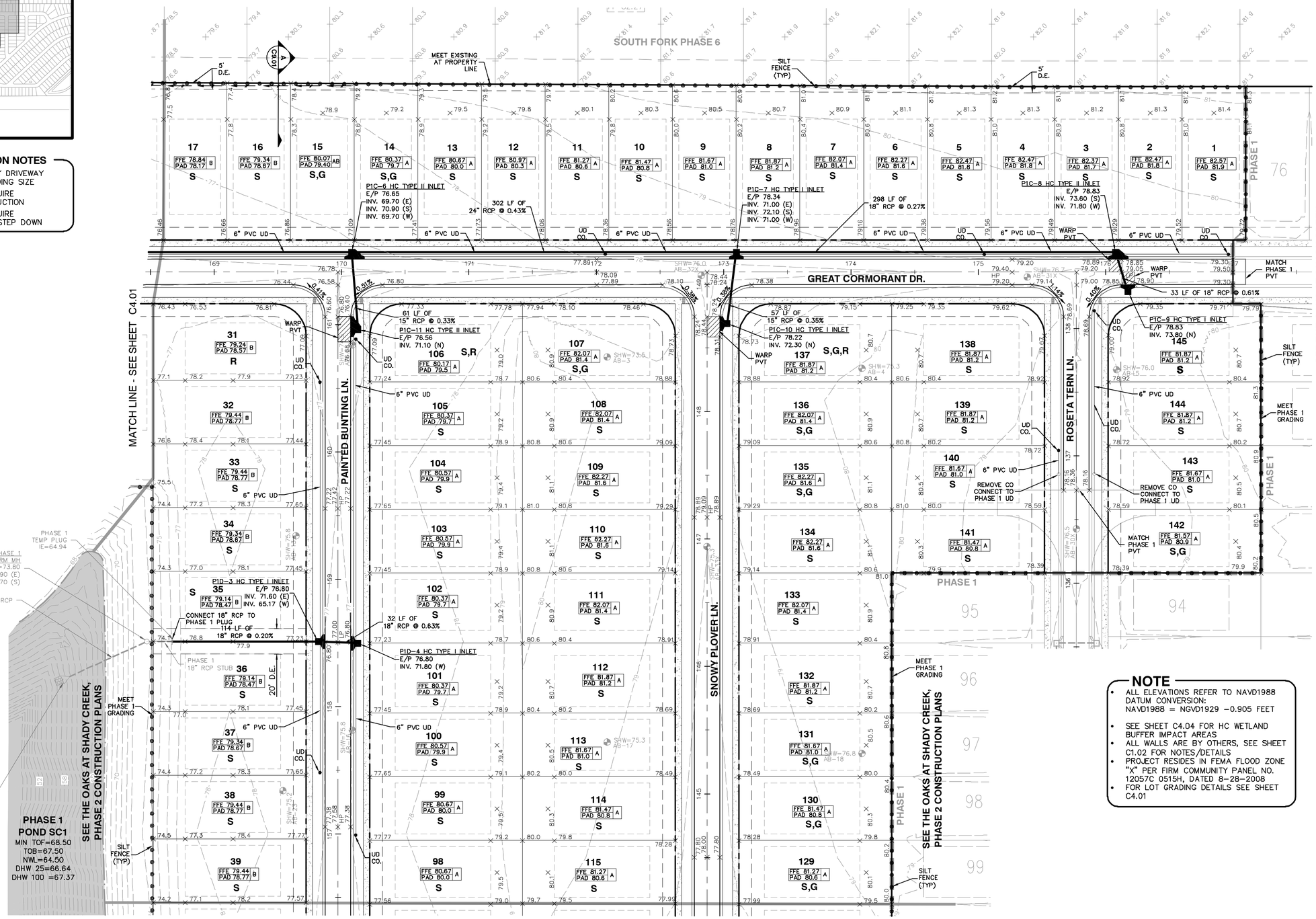

NOTE

- ALL ELEVATIONS REFER TO NAVD1988 DATUM CONVERSION: NAVD1988 = NGVD1929 −0.905 FEET
- SEE SHEET C4.04 FOR HC WETLAND BUFFER IMPACT AREAS
- ALL WALLS ARE BY OTHERS, SEE SHEET C1.02 FOR NOTES/DETAILS
- PROJECT RESIDES IN FEMA FLOOD ZONE "X" PER FIRM COMMUNITY PANEL NO. 12057C 0515H, DATED 8-28-2008
- FOR LOT GRADING DETAILS SEE SHEET C4.01

© COPYRIGHT 2014 KING ENGINEERING ASSOCIATES, INC. DRAWINGS AND CONCEPTS MAY NOT BE USED OR REPRODUCED WITHOUT WRITTEN PERMISSION CONSENT IS HEREBY GRANTED FOR SPECIALLY TO GOVERNMENTAL AGENCIES TO REPRODUCE THIS DOCUMENT IN COMPLIANCE WITH F.S. CHAPTER 119.

Q:\CIVIL\5163\905\000\Production\Drawings\PLN\PGD-02.dwg , February 11, 2015 10:34 AM , King Engineering Associate Inc.

DESIGNED	JLW
DRAWN	JLW
CHECKED	TLT/AGK
Q.C.	LFK

THE SIGNATURE OF THE QUALITY CONTROL OFFICER IN THIS SPACE INDICATES THAT ALL REQUIRED PERMITS HAVE BEEN OBTAINED AND THAT CONSTRUCTION IS AUTHORIZED TO COMMENCE.

MSR 2/5/15

King ENGINEERING ASSOCIATES, INC.
4921 Memorial Highway
One Memorial Center, Suite 300
Tampa, Florida 33634
Phone 813 880-8881
Fax 813 880-8882
www.kingengineering.com
Engineering License #2610

THE OAKS AT SHADY CREEK, PHASE 2

FOR

LENNAR HOMES, LLC
4600 WEST CYPRESS ST. SUITE 200
TAMPA, FL. 34683
813-574-5653

PAVING, GRADING AND DRAINAGE PLAN

NO.	DATE	DESCRIPTION	APPD BY

JOB NO.	5163-905-000
DATE:	10-28-2014
SCALE:	AS SHOWN
SHEET NO.	C4.02

HC FINAL SET
FEB. 11, 2015

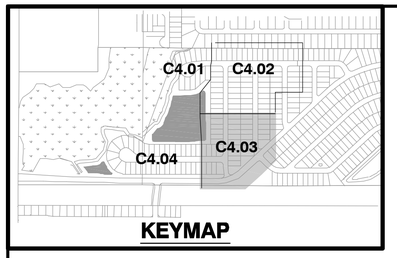

LOT CONSTRUCTION NOTES

- **R =** LOT RESTRICTED BY DRIVEWAY LOCATION OR BUILDING SIZE
- **S =** BUILDING MAY REQUIRE STEMWALL CONSTRUCTION
- **G =** BUILDING MAY REQUIRE GARAGE TO HAVE STEP DOWN

NOTE

- ALL ELEVATIONS REFER TO NAVD1988 DATUM CONVERSION: NAVD1988 = NGVD1929 −0.905 FEET
- SEE SHEET C4.04 FOR HC WETLAND BUFFER IMPACT AREAS
- ALL WALLS ARE BY OTHERS, SEE SHEET C1.02 FOR NOTES/DETAILS
- PROJECT RESIDES IN FEMA FLOOD ZONE "X" PER FIRM COMMUNITY PANEL NO. 12057C 0515H, DATED 8-28-2008
- FOR LOT GRADING DETAILS SEE SHEET C4.01

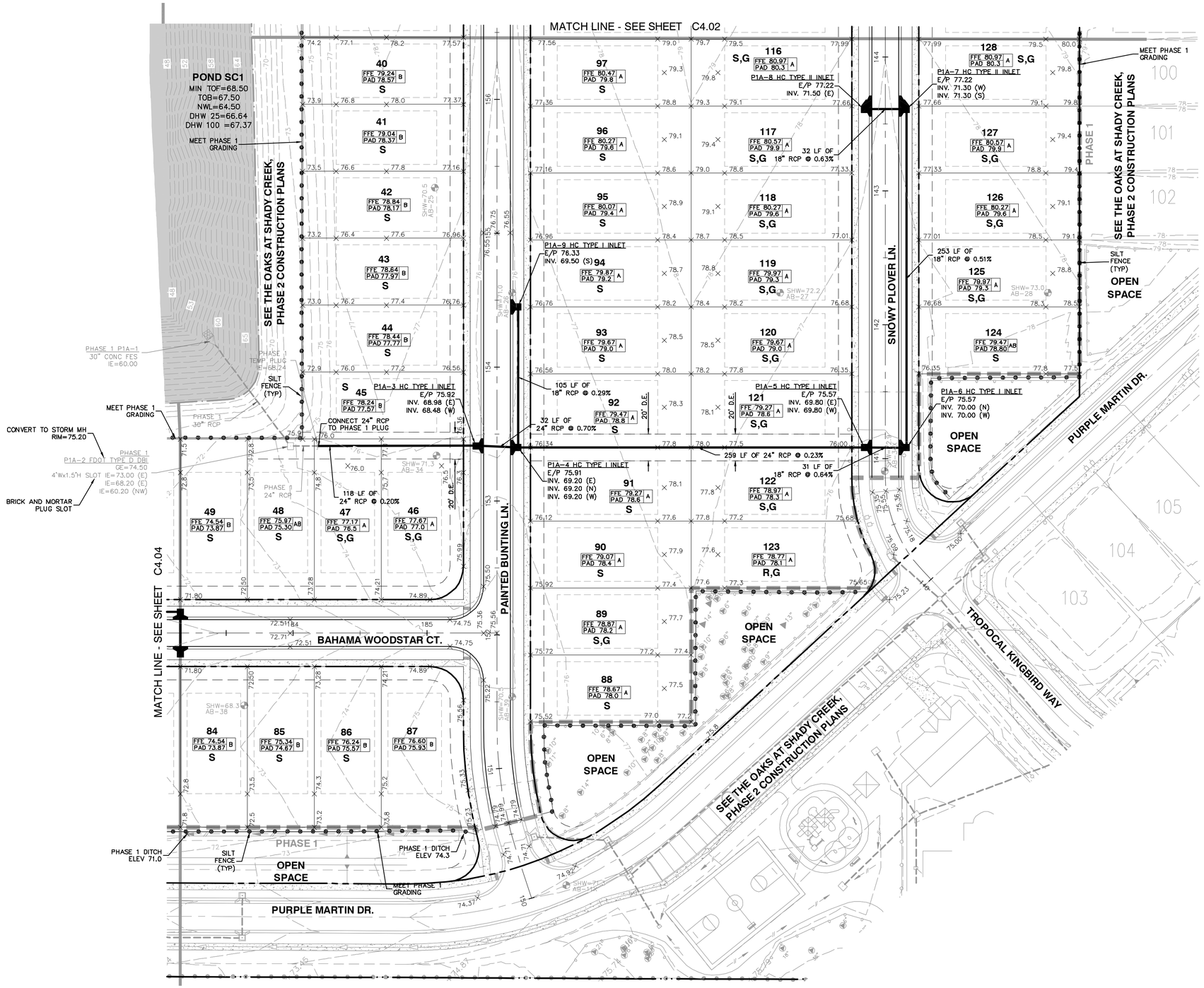

Q:\CIVIL\5163\905\000\Production\Drawings\PLN-PGD-03.dwg , February 11, 2015 10:34 AM , King Engineering Associate Inc.
© COPYRIGHT 2014 KING ENGINEERING ASSOCIATES, INC. DRAWINGS AND CONCEPTS MAY NOT BE USED OR REPRODUCED WITHOUT WRITTEN PERMISSION
CONCEPTS REPRESENTED BY DRAWINGS ARE PROPRIETARY TO KING ENGINEERING ASSOCIATES, INC. AND ARE SUBJECT TO COPYRIGHT PROTECTION UNDER TITLE 17, CHAPTER 1101.

DESIGNED JLW	THE SIGNATURE OF THE QUALITY CONTROL OFFICER IN THIS SPACE INDICATES THAT ALL REQUIRED PERMITS HAVE BEEN OBTAINED AND THAT CONSTRUCTION IS AUTHORIZED TO COMMENCE.	JOB NO. 5163-905-000	SHEET NO. C4.03
DRAWN JLW		DATE 10-28-2014	
CHECKED TLT/AGK		SCALE AS SHOWN	
Q.C. LGK	MBR 2/5/15	HC FINAL SET FEB. 11, 2015	

King ENGINEERING ASSOCIATES, INC.
4921 Memorial Highway
One Memorial Center, Suite 300
Tampa, Florida 33634
Phone 813 880-8881
Fax 813 880-8882
www.kingengineering.com
Engineering License #2610

THE OAKS AT SHADY CREEK, PHASE 2

FOR

LENNAR HOMES, LLC
4600 WEST CYPRESS ST. SUITE 200
TAMPA, FL. 34683
813-574-5653

PAVING, GRADING AND DRAINAGE PLAN

NO.	DATE	DESCRIPTION	APP'D BY

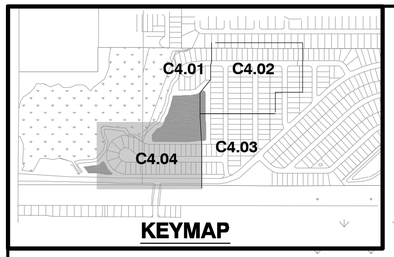

NOTE

- ALL ELEVATIONS REFER TO NAVD1988 DATUM CONVERSION: NAVD1988 = NGVD1929 −0.905 FEET
- SEE SHEET C4.04 FOR HC WETLAND BUFFER IMPACT AREAS
- ALL WALLS ARE BY OTHERS, SEE SHEET C1.02 FOR NOTES/DETAILS
- PROJECT RESIDES IN FEMA FLOOD ZONE "X" PER FIRM COMMUNITY PANEL NO. 12057C 0515H, DATED 8-28-2008
- FOR LOT GRADING DETAILS SEE SHEET C4.01

LOT CONSTRUCTION NOTES

R = LOT RESTRICTED BY DRIVEWAY LOCATION OR BUILDING SIZE

S = BUILDING MAY REQUIRE STEMWALL CONSTRUCTION

G = BUILDING MAY REQUIRE GARAGE TO HAVE STEP DOWN

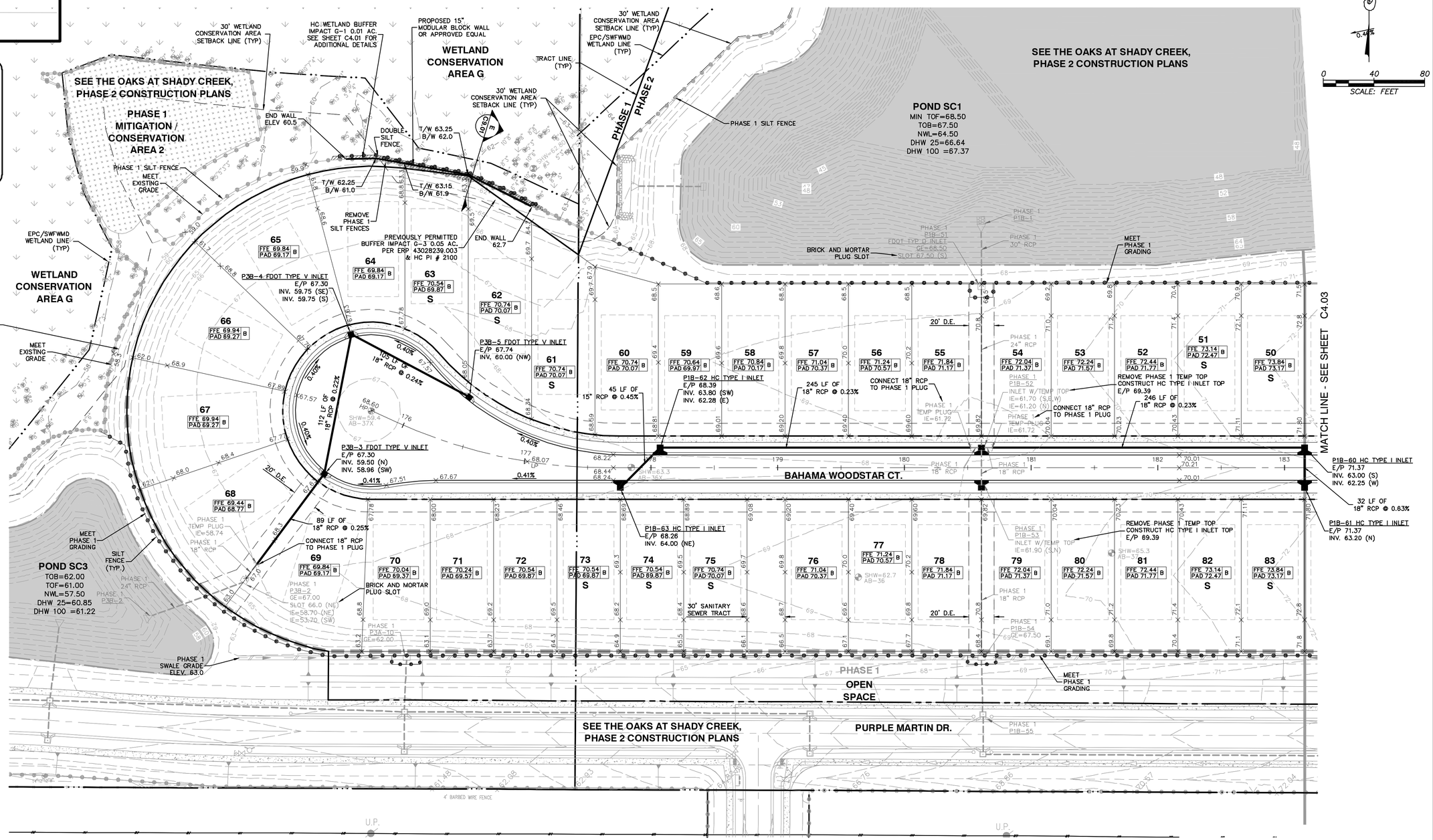

© COPYRIGHT 2014 KING ENGINEERING ASSOCIATES, INC. DRAWINGS AND CONCEPTS MAY NOT BE USED OR REPRODUCED WITHOUT WRITTEN PERMISSION. CONCEPTS REMAIN OWNED PERSONALLY TO KING ENGINEERING ASSOCIATES, INC. PER PROJECT AND COUNSELED IN COMPLIANCE WITH U.S. COPYRIGHT LAW.

Q:\CIVIL\5163\905\000\Production\Drawings\PLN-PGD-04.dwg , February 11, 2015 10:35 AM , King Engineering Associate Inc.

DESIGNED	JLW
DRAWN	JLW
CHECKED	TLT/AGK
Q.C.	LJK

THE SIGNATURE OF THE QUALITY CONTROL OFFICER IN THIS SPACE INDICATES THAT ALL REQUIRED PERMITS HAVE BEEN OBTAINED AND THAT CONSTRUCTION IS AUTHORIZED TO COMMENCE.

MCR 2/5/15

King ENGINEERING ASSOCIATES, INC.
4921 Memorial Highway
One Memorial Center, Suite 300
Tampa, Florida 33634
Phone 813 880-8881
Fax 813 880-8882
www.kingengineering.com
Engineering License #2610

THE OAKS AT SHADY CREEK, PHASE 2

FOR

LENNAR HOMES, LLC

4600 WEST CYPRESS ST. SUITE 200
TAMPA, FL. 34683
813-574-5653

PAVING, GRADING AND DRAINAGE PLAN

NO.	DATE	DESCRIPTION	APP'D BY

JOB NO. 5163-905-000

DATE: 10-28-2014

SCALE: AS SHOWN

SHEET NO. C4.04

HC FINAL SET
FEB. 11, 2015

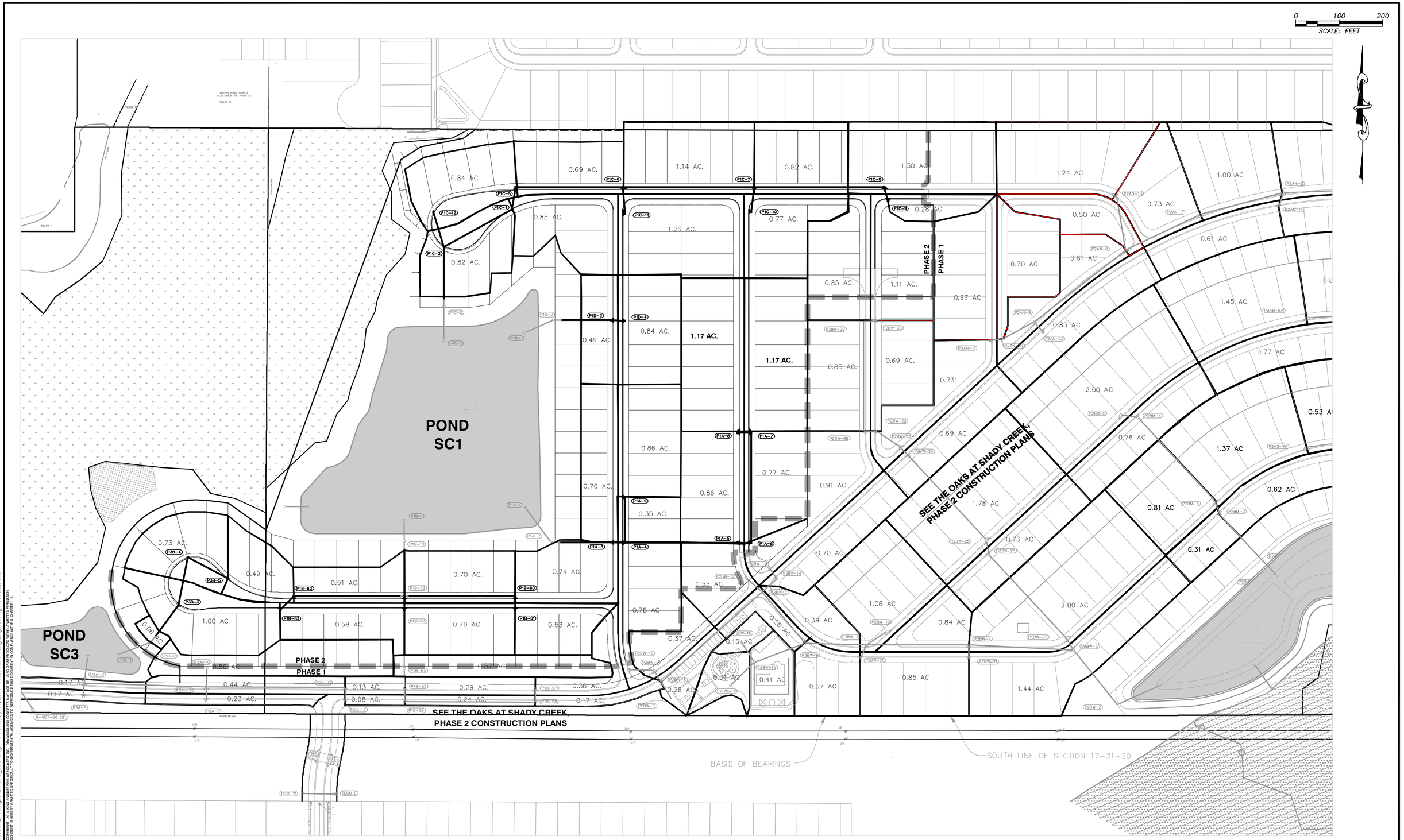

Q:\CIVIL\5163\905\000\Production\Drawings\PLN-STM_MAP.dwg , February 11, 2015 10:36 AM , King Engineering Associate Inc.
© COPYRIGHT 2014 KING ENGINEERING ASSOCIATES, INC. DRAWINGS AND CONCEPTS MAY NOT BE USED OR REPRODUCED WITHOUT WRITTEN PERMISSION
CONTACT IS HEREBY GRANTED EXCLUSIVELY TO CONTRACTUAL AGENCIES TO REPRODUCE THE DOCUMENT IN COMPLIANCE WITH F.S. CHAPTER 119.

DESIGNED JLW DRAWN JLW CHECKED TLT/AGK Q.C. LFK	THE SIGNATURE OF THE QUALITY CONTROL OFFICER IN THIS SPACE INDICATES THAT ALL REQUIRED PERMITS HAVE BEEN OBTAINED AND THAT CONSTRUCTION IS AUTHORIZED TO COMMENCE. MSR 2/5/15	King ENGINEERING ASSOCIATES, INC. 4921 Memorial Highway One Memorial Center, Suite 300 Tampa, Florida 33634 Phone 813 880-8881 Fax 813 880-8882 www.kingengineering.com Engineering License #2610	**THE OAKS AT SHADY CREEK, PHASE 2** FOR **LENNAR HOMES, LLC** 4600 WEST CYPRESS ST. SUITE 200 TAMPA, FL. 34683 813-574-5653

OVERALL DRAINAGE MAP

NO.	DATE	DESCRIPTION	APPD BY

JOB NO. 5163-905-000
DATE: 10-28-2014
SCALE: AS SHOWN
SHEET NO. C4.05
HC FINAL SET
FEB. 11, 2015

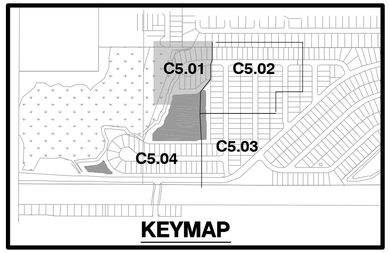

SPECIFICATION 331002

Exhibit No. W-11

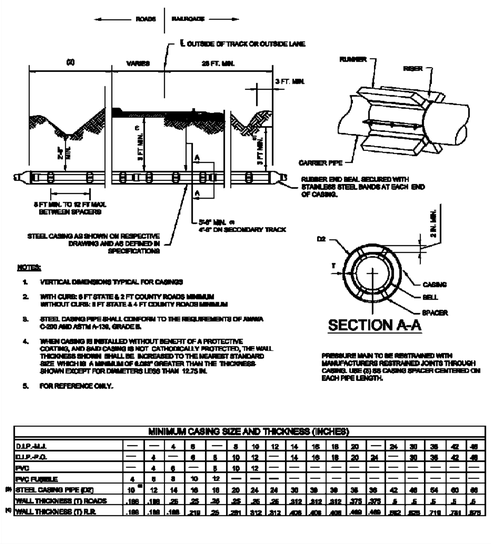

NOTES:

1. VERTICAL DIMENSIONS TYPICAL FOR CASINGS
2. WITH CURB: 8 FT STATE & 2 FT COUNTY ROADS MINIMUM
   WITHOUT CURB: 8 FT STATE & 4 FT COUNTY ROADS MINIMUM
3. STEEL CASING PIPE SHALL CONFORM TO THE REQUIREMENTS OF AWWA C-200 AND ASTM A-139, GRADE B.
4. WHEN CASING IS INSTALLED WITHOUT BENEFIT OF A PROTECTIVE COATING, AND SAID CASING IS NOT CATHODICALLY PROTECTED, THE WALL THICKNESS SHOWN SHALL BE INCREASED TO THE NEAREST STANDARD SIZE WHICH IS A MINIMUM OF 0.050" GREATER THAN THE THICKNESS SHOWN EXCEPT FOR DIAMETERS LESS THAN 12.75 IN.
5. FOR REFERENCE ONLY.

MINIMUM CASING SIZE AND THICKNESS (INCHES)

D.I.P.-M.J.	—	—	4	6	—	8	10	12	14	16	18	20	—	24	30	36	42	48
D.I.P.-P.O.	—	4	—	6	8	10	12	—	14	16	18	20	24	—	30	36	42	48
PVC	—	4	6	—	8	10	12	—	—	—	—	—	—	—	—	—	—	—
PVC FUSIBLE	4	6	8	10	12	—	—	—	—	—	—	—	—	—	—	—	—	—
(*) STEEL CASING PIPE (DX)	10	12	14	16	18	20	24	24	30	30	30	36	36	42	48	54	60	66
WALL THICKNESS (T) ROADS	.188	.188	.25	.25	.30	.35	.35	.35	.312	.312	.312	.375	.375	5	.5	.5	.5	.5
(**) WALL THICKNESS (T) R.R.	.188	.188	.188	.219	.25	.281	.312	.312	.406	.406	.406	.469	.469	.562	.625	.719	.781	.875

CASING DETAILS JACK & BORE	10/2013
HILLSBOROUGH COUNTY, FLORIDA	SCALE: N.T.S.

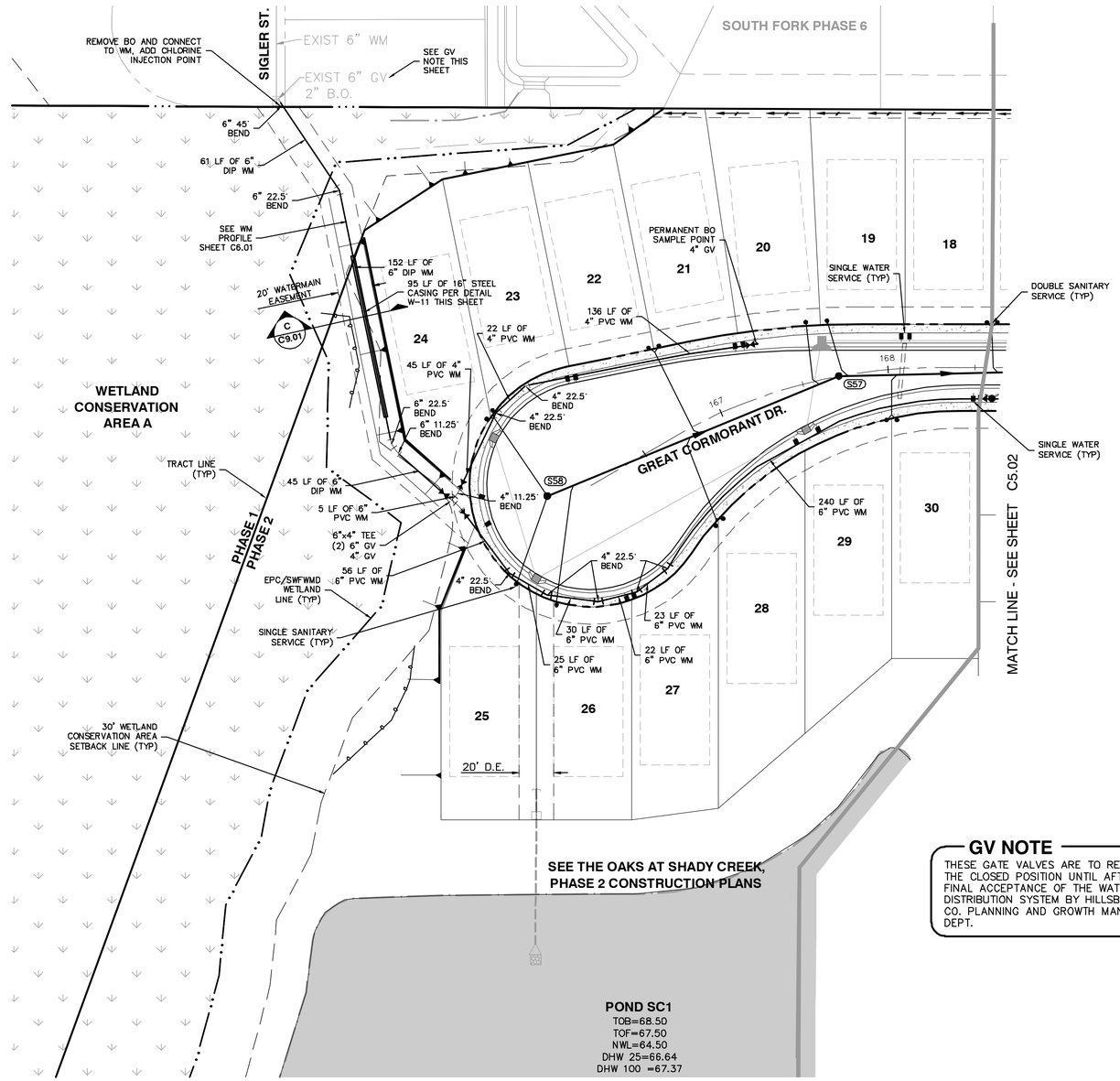

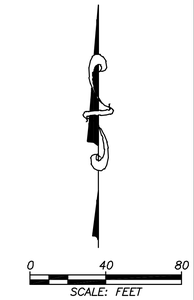

GV NOTE

THESE GATE VALVES ARE TO REMAIN IN THE CLOSED POSITION UNTIL AFTER THE FINAL ACCEPTANCE OF THE WATER DISTRIBUTION SYSTEM BY HILLSBOROUGH CO. PLANNING AND GROWTH MANAGEMENT DEPT.

Q:\CIVIL\5163\905\000\Production\Drawings\PLN-UTL-01.dwg February 11, 2015 10:36 AM King Engineering Associate Inc.
© COPYRIGHT 2014 KING ENGINEERING ASSOCIATES, INC. DRAWINGS AND CONCEPTS MAY NOT BE USED OR REPRODUCED WITHOUT WRITTEN PERMISSION
CONSULTANT IS HEREBY GRANTED EXCLUSIVELY TO GOVERNMENTAL AGENCIES TO REPRODUCE THIS DOCUMENT FOR COMPLIANCE WITH F.S. CHAPTER 119.

DESIGNED	THE SIGNATURE OF THE QUALITY CONTROL OFFICER IN THIS SPACE INDICATES THAT ALL REQUIRED PERMITS HAVE BEEN OBTAINED AND THAT CONSTRUCTION IS AUTHORIZED TO COMMENCE.
JLW	
DRAWN: JLW	
CHECKED: TLT/AGK	
Q.C. LGK	MER 2/5/15

King ENGINEERING ASSOCIATES, INC.
4921 Memorial Highway
One Memorial Center, Suite 300
Tampa, Florida 33634
Phone 813 880-8881
Fax 813 880-8882
www.kingengineering.com
Engineering License #2610

THE OAKS AT SHADY CREEK, PHASE 2

FOR

LENNAR HOMES, LLC
4600 WEST CYPRESS ST. SUITE 200
TAMPA, FL. 34683
813-574-5653

SANITARY SEWER AND WATER DISTRIBUTION PLAN

NO.	DATE	DESCRIPTION	APP'D BY

JOB NO.	SHEET NO.
5163-905-000	C5.01
DATE: 10-28-2014	
SCALE: AS SHOWN	
HC FINAL SET FEB. 11, 2015	

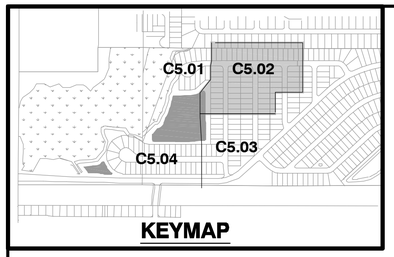

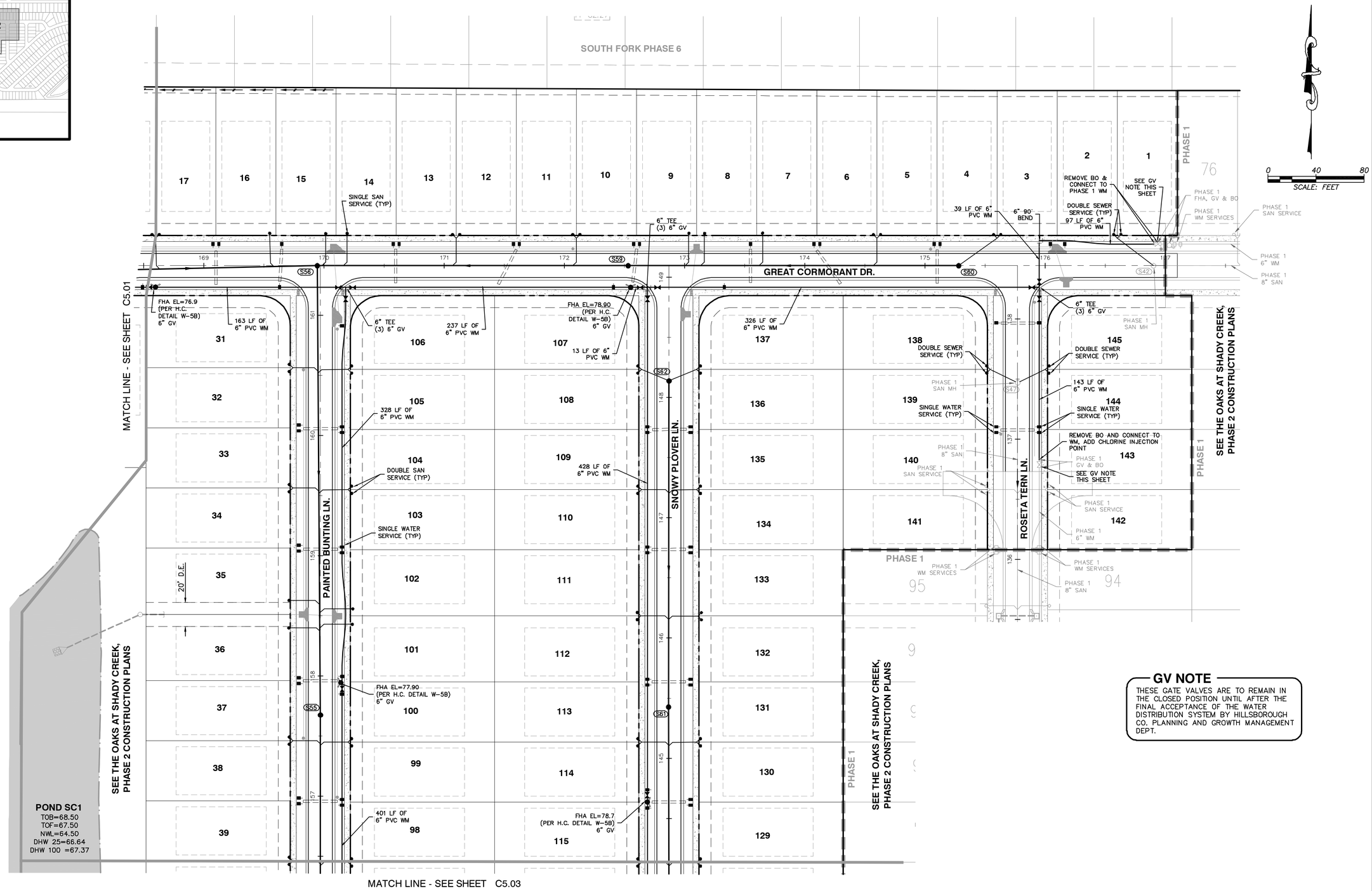

GV NOTE

THESE GATE VALVES ARE TO REMAIN IN THE CLOSED POSITION UNTIL AFTER THE FINAL ACCEPTANCE OF THE WATER DISTRIBUTION SYSTEM BY HILLSBOROUGH CO. PLANNING AND GROWTH MANAGEMENT DEPT.

© COPYRIGHT 2014 KING ENGINEERING ASSOCIATES, INC. DRAWINGS AND CONCEPTS MAY NOT BE USED OR REPRODUCED WITHOUT WRITTEN PERMISSION CONTACT IS HEREBY GRANTED SPECIFICALLY TO CONTRACTORS, AGENCIES TO REPRODUCE THIS DOCUMENT TO COMPLIANCE WITH F.S. CHAPTER 119.

Q:\CIVIL\5163\905\000\Production\Drawings\PLN-UTL-02.dwg , February 11, 2015 10:37 AM , King Engineering Associate Inc.

DESIGNED JLW	THE SIGNATURE OF THE QUALITY CONTROL OFFICER IN THIS SPACE INDICATES THAT ALL REQUIRED PERMITS HAVE BEEN OBTAINED AND THAT CONSTRUCTION IS AUTHORIZED TO COMMENCE.	King ENGINEERING ASSOCIATES, INC.	4921 Memorial Highway One Memorial Center, Suite 300 Tampa, Florida 33634 Phone 813 880-8881 Fax 813 880-8882 www.kingengineering.com Engineering License #2610	**THE OAKS AT SHADY CREEK, PHASE 2** FOR **LENNAR HOMES, LLC** 4600 WEST CYPRESS ST. SUITE 200 TAMPA, FL. 34683 813-574-5653
DRAWN JLW				**SANITARY SEWER AND WATER DISTRIBUTION PLAN**
CHECKED TLT/AGK				
Q.C. LGK	MBR 2/5/15			

NO.	DATE	DESCRIPTION	APP'D BY

JOB NO. 5163-905-000
DATE: 10-28-2014
SCALE: AS SHOWN
SHEET NO. C5.02
HC FINAL SET FEB. 11, 2015

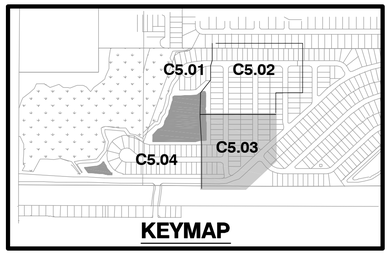

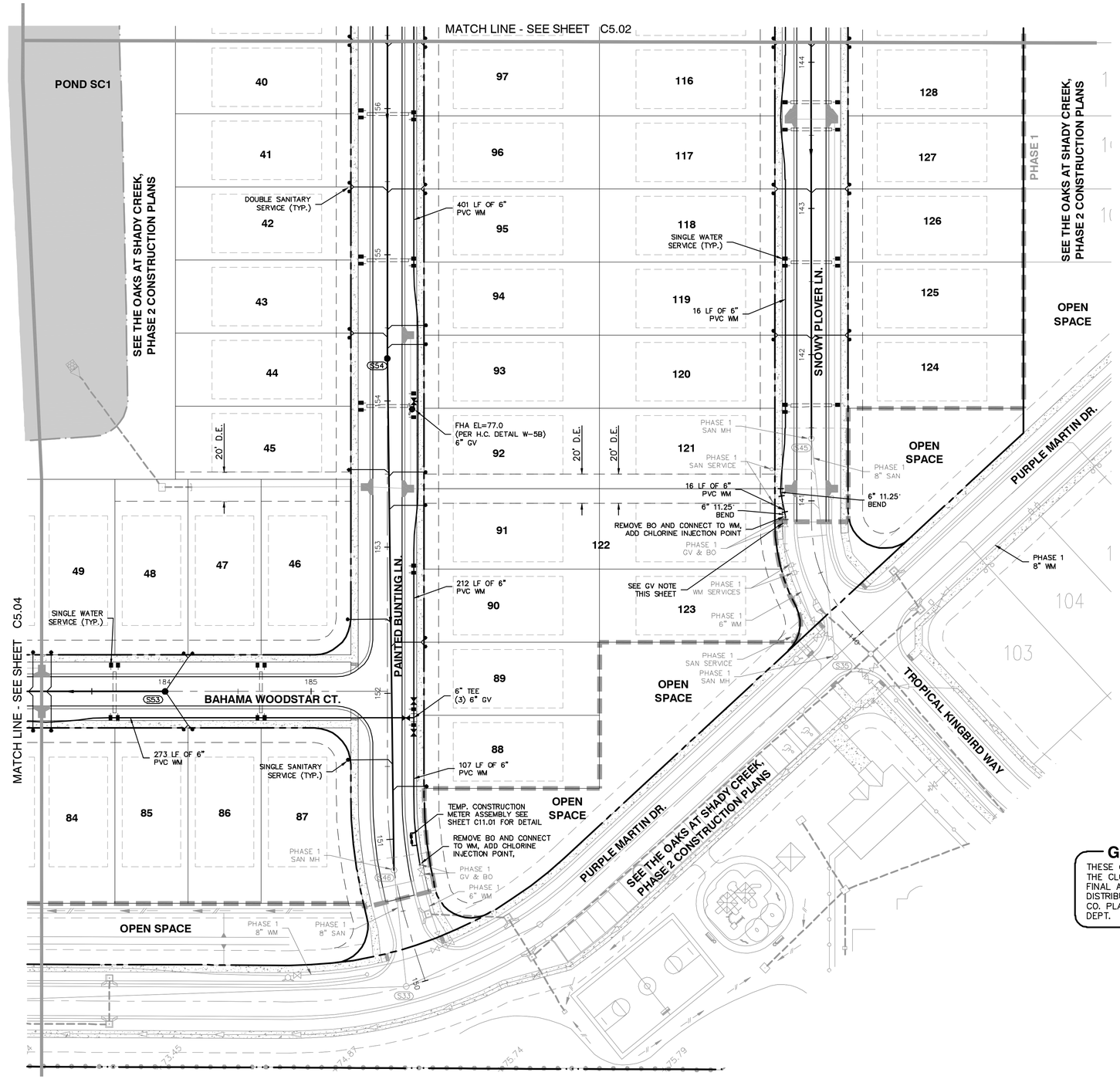

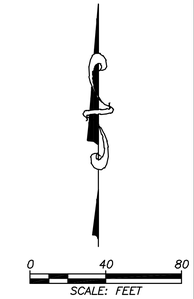

GV NOTE

THESE GATE VALVES ARE TO REMAIN IN THE CLOSED POSITION UNTIL AFTER THE FINAL ACCEPTANCE OF THE WATER DISTRIBUTION SYSTEM BY HILLSBOROUGH CO. PLANNING AND GROWTH MANAGEMENT DEPT.

© COPYRIGHT 2014 KING ENGINEERING ASSOCIATES, INC. DRAWINGS AND CONCEPTS MAY NOT BE USED OR REPRODUCED WITHOUT WRITTEN PERMISSION. CONSULT THE REPRESENTATIVE OFFICIALLY TO DOCUMENTS, ALL AGENCIES THE PROJECT THIS DOCUMENT IS COVERED BY 17 U.S. CHAPTER 1 TITLE.

Q:\CIVIL\5163\905\000\Production\Drawings\PLN-UTL-03.dwg , February 11, 2015 10:37 AM , King Engineering Associate Inc.

DESIGNED	JLW
DRAWN	JLW
CHECKED	TLT/AGK
Q.C.	LJK

THE SIGNATURE OF THE QUALITY CONTROL OFFICER IN THIS SPACE INDICATES THAT ALL REQUIRED PERMITS HAVE BEEN OBTAINED AND THAT CONSTRUCTION IS AUTHORIZED TO COMMENCE.

MER 2/5/15

King ENGINEERING ASSOCIATES, INC.
4921 Memorial Highway
One Memorial Center, Suite 300
Tampa, Florida 33634
Phone 813 880-8881
Fax 813 880-8882
www.kingengineering.com
Engineering License #2610

THE OAKS AT SHADY CREEK, PHASE 2

FOR

LENNAR HOMES, LLC
4600 WEST CYPRESS ST. SUITE 200
TAMPA, FL. 34683
813-574-5653

SANITARY SEWER AND WATER DISTRIBUTION PLAN

NO.	DATE	DESCRIPTION	APP'D BY

JOB NO.	5163-905-000
DATE:	10-28-2014
SCALE:	AS SHOWN
SHEET NO.	C5.03

HC FINAL SET
FEB. 11, 2015

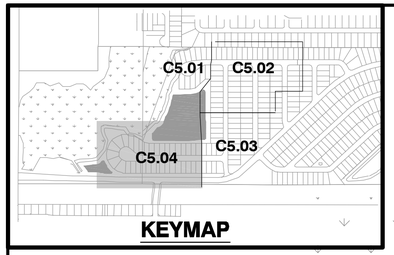

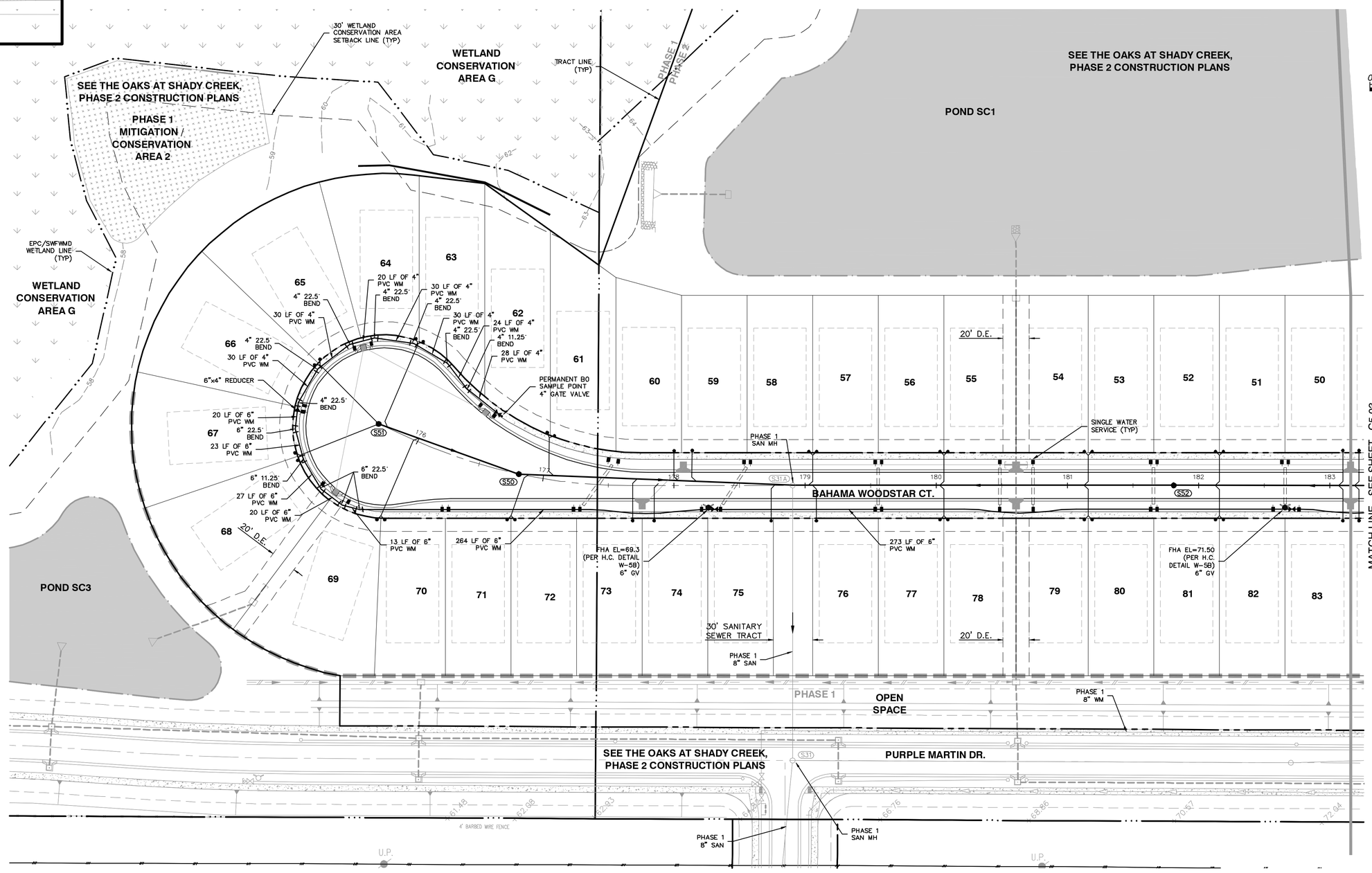

© COPYRIGHT 2014 KING ENGINEERING ASSOCIATES, INC. DRAWINGS AND CONCEPTS MAY NOT BE USED OR REPRODUCED WITHOUT WRITTEN PERMISSION
CONTACT IS HEREBY GRANTED SPECIFICALLY TO GOVERNMENTAL AGENCIES TO REPRODUCE THIS DOCUMENT TO COMPLIANCE WITH F.S. CHAPTER 119.

Q:\CIVIL\5163\905\000\Production\Drawings\PLN-UTL-04.dwg , February 11, 2015 10:38 AM, King Engineering Associate Inc.

DESIGNED	JLW
DRAWN	JLW
CHECKED	TLT/AGK
Q.C.	MBR 2/5/15 LGK

THE SIGNATURE OF THE QUALITY CONTROL OFFICER IN THIS SPACE INDICATES THAT ALL REQUIRED PERMITS HAVE BEEN OBTAINED AND THAT CONSTRUCTION IS AUTHORIZED TO COMMENCE.

King ENGINEERING ASSOCIATES, INC.
4921 Memorial Highway
One Memorial Center, Suite 300
Tampa, Florida 33634
Phone 813 880-8881
Fax 813 880-8882
www.kingengineering.com
Engineering License #2610

THE OAKS AT SHADY CREEK, PHASE 2

FOR

LENNAR HOMES, LLC
4600 WEST CYPRESS ST. SUITE 200
TAMPA, FL. 34683
813-574-5653

SANITARY SEWER AND WATER DISTRIBUTION PLAN

NO.	DATE	DESCRIPTION	APP'D BY

JOB NO.	5163-905-000
DATE:	10-28-2014
SCALE:	AS SHOWN
SHEET NO.	C5.04

HC FINAL SET
FEB. 11, 2015

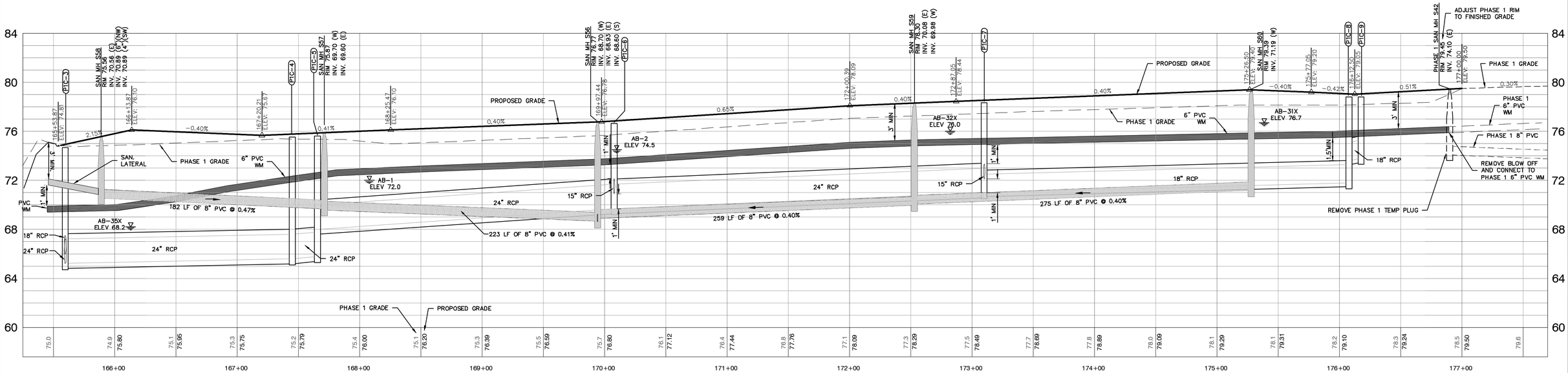

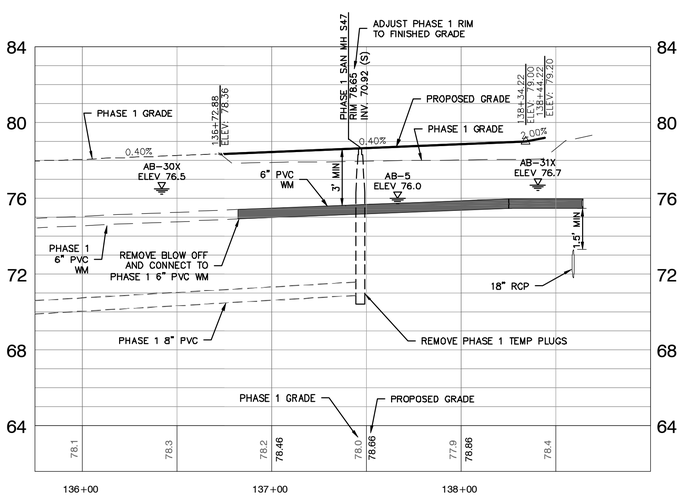

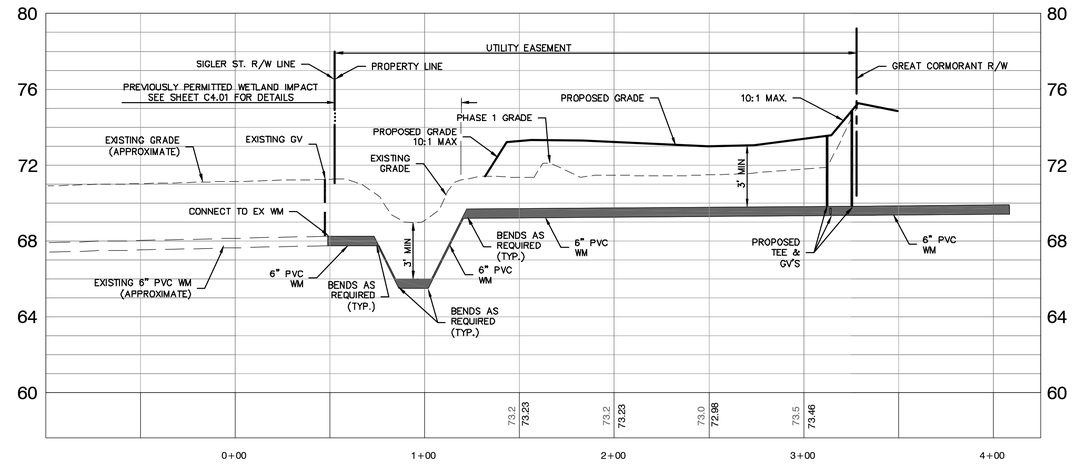

Q:\CIVIL\5163\905\000\Production\Drawings\PLN-PROFILE.dwg , February 11, 2015 10:39 AM , King Engineering Associate Inc.
© COPYRIGHT 2014 KING ENGINEERING ASSOCIATES, INC. DRAWINGS AND CONCEPTS MAY NOT BE USED OR REPRODUCED WITHOUT WRITTEN PERMISSION. COPIES IS HEREBY GRANTED SPECIFICALLY TO GOVERNMENTAL AGENCIES TO REPRODUCE THIS DOCUMENT IN COMPLIANCE WITH F.S. CHAPTER 119.

DESIGNED JLW	THE SIGNATURE OF THE QUALITY CONTROL OFFICER IN THIS SPACE INDICATES THAT ALL REQUIRED PERMITS HAVE BEEN OBTAINED AND THAT CONSTRUCTION IS AUTHORIZED TO COMMENCE.	King ENGINEERING ASSOCIATES, INC.	4921 Memorial Highway One Memorial Center, Suite 300 Tampa, Florida 33634 Phone 813 880-8881 Fax 813 880-8882 www.kingengineering.com Engineering License #2610
DRAWN JLW			
CHECKED TLT/AGK			
Q.C. LGK	MER 2/5/15		

THE OAKS AT SHADY CREEK, PHASE 2

FOR

LENNAR HOMES, LLC

4600 WEST CYPRESS ST. SUITE 200
TAMPA, FL. 34683
813-574-5653

PROFILE

NO.	DATE	DESCRIPTION	APP'D BY

JOB NO. 5163-905-000
DATE: 10-28-2014
SCALE: AS SHOWN
SHEET NO. C6.01

HC FINAL SET
FEB. 11, 2015

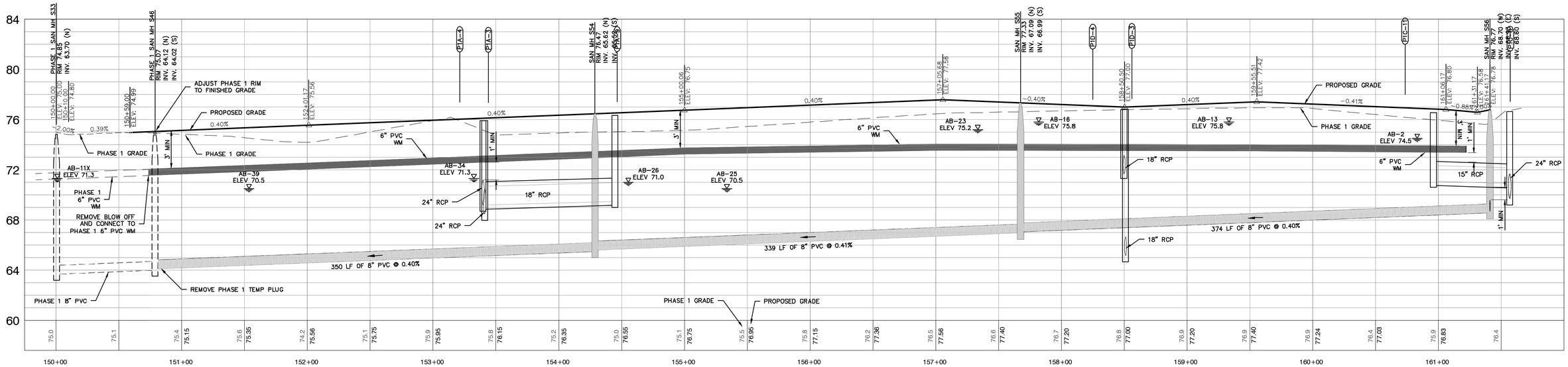

PAINTED BUNTING LN. (STA: 149+75.00 to STA: 162+00.00)
SCALE: 1"=40' HORZ. / 1"=4' VERT.

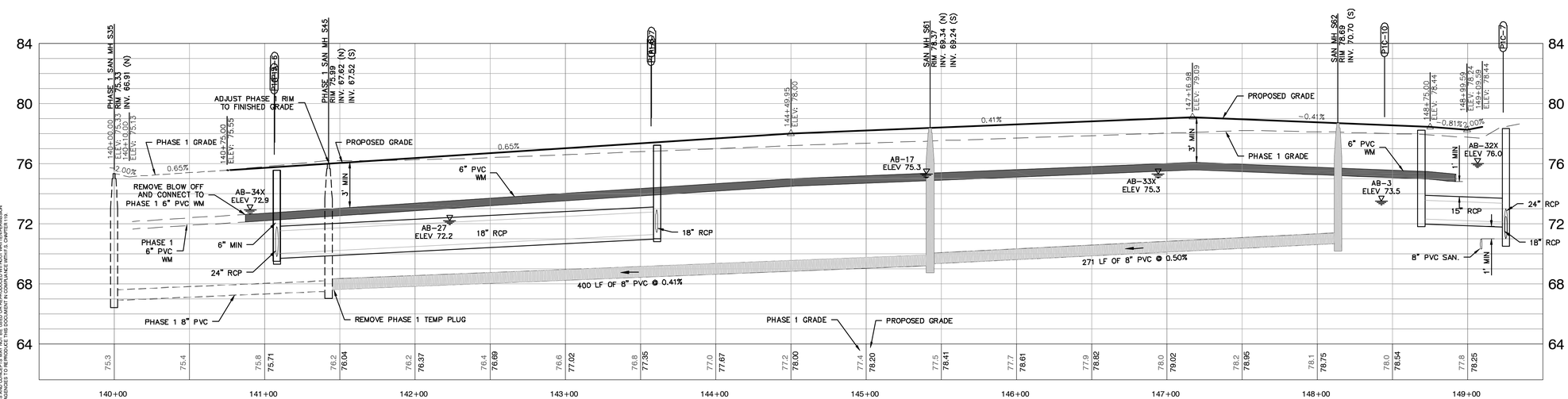

SNOWY PLOVER LN. (STA: 139+50.00 to STA: 149+50.00)
SCALE: 1"=40' HORZ. / 1"=4' VERT.

Q:\CIVIL\5163\905\000\Production\Drawings\PLN-PROFILE.dwg , February 11, 2015 10:39 AM , King Engineering Associate Inc.
© COPYRIGHT 2014 KING ENGINEERING ASSOCIATES, INC. DRAWINGS AND CONCEPTS MAY NOT BE USED OR REPRODUCED WITHOUT WRITTEN PERMISSION.
CONSULT KING ENGINEERING ASSOCIATES, INC. REGARDING ANY USE OF THESE DOCUMENTS IN CONFORMANCE WITH F.S. CHAPTER 119.

DESIGNED JLW DRAWN JLW CHECKED TLT/AGK Q.C. LJK	THE SIGNATURE OF THE QUALITY CONTROL OFFICER IN THIS SPACE INDICATES THAT ALL REQUIRED PERMITS HAVE BEEN OBTAINED AND THAT CONSTRUCTION IS AUTHORIZED TO COMMENCE. MCR 2/5/15	King ENGINEERING ASSOCIATES, INC.	4921 Memorial Highway One Memorial Center, Suite 300 Tampa, Florida 33634 Phone 813 880-8881 Fax 813 880-8882 www.kingengineering.com Engineering License #2610	**THE OAKS AT SHADY CREEK, PHASE 2** **FOR** **LENNAR HOMES, LLC** **4600 WEST CYPRESS ST. SUITE 200** **TAMPA, FL. 34683** **813-574-5653**	**PROFILE**

NO.	DATE	DESCRIPTION	APP'D BY

JOB NO. 5163-905-000
DATE: 10-28-2014
SCALE: AS SHOWN
SHEET NO. **C6.02**
HC FINAL SET
FEB. 11, 2015

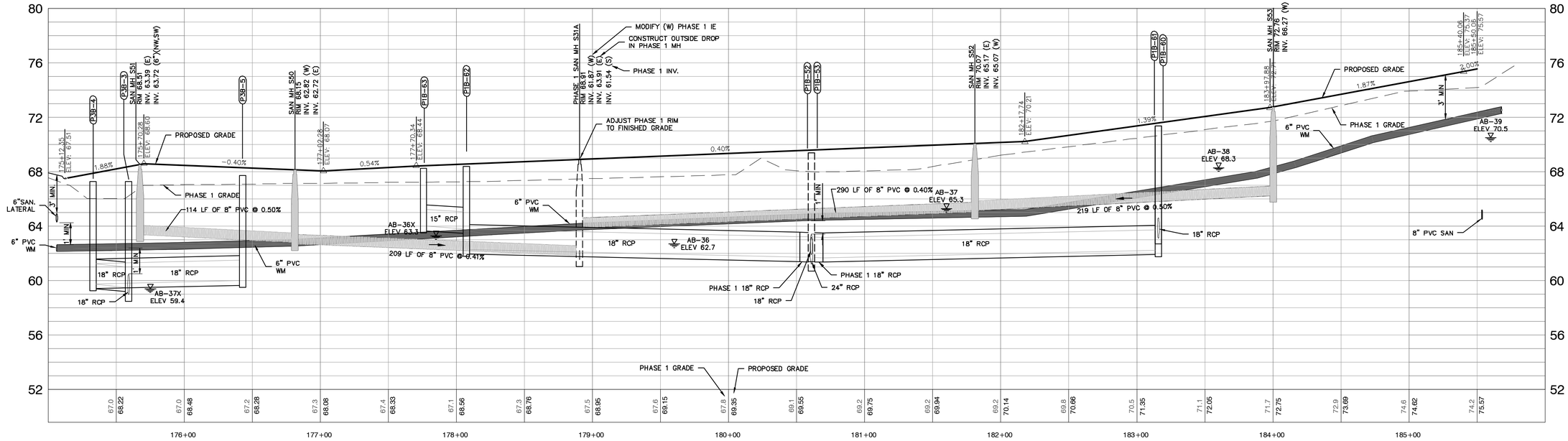

BAHAMA WOODSTAR CT. (STA: 175+00.00 to STA: 186+00.00)
SCALE: 1"=40' HORZ. / 1"=4' VERT.

Q:\CIVIL\5163\905\000\Production\Drawings\PLN-PROFILE.dwg , February 11, 2015 10:39 AM , King Engineering Associate Inc.
© COPYRIGHT 2014 KING ENGINEERING ASSOCIATES, INC. DRAWINGS AND CONCEPTS MAY NOT BE USED OR REPRODUCED WITHOUT WRITTEN PERMISSION.
COPIES IS HEREBY GRANTED SPECIFICALLY TO GOVERNMENTAL AGENCIES TO REPRODUCE THIS DOCUMENT IN COMPLIANCE WITH 119 CHAPTER 119.

DESIGNED: JLW
DRAWN: JLW
CHECKED: TLT/AGK
Q.C. LGK

THE SIGNATURE OF THE QUALITY CONTROL OFFICER IN THIS SPACE INDICATES THAT ALL REQUIRED PERMITS HAVE BEEN OBTAINED AND THAT CONSTRUCTION IS AUTHORIZED TO COMMENCE.

MER 2/5/15

King ENGINEERING ASSOCIATES, INC.
4921 Memorial Highway
One Memorial Center, Suite 300
Tampa, Florida 33634
Phone 813 880-8881
Fax 813 880-8882
www.kingengineering.com
Engineering License #2610

THE OAKS AT SHADY CREEK, PHASE 2

FOR

LENNAR HOMES, LLC
4600 WEST CYPRESS ST. SUITE 200
TAMPA, FL. 34683
813-574-5653

PROFILE

NO.	DATE	DESCRIPTION	APP'D BY

JOB NO. 5163-905-000
DATE: 10-28-2014
SCALE: AS SHOWN
SHEET NO. C6.03

HC FINAL SET
FEB. 11, 2015

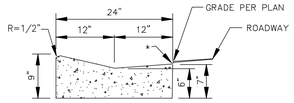

MIAMI CURB

* PAVEMENT TO BE CONSTRUCTED 1/4" ABOVE THE LIP OF THE CURB

SEE FDOT INDEX 300 FOR ADDITIONAL REQUIREMENTS

MIAMI CURB DETAIL

N.T.S.

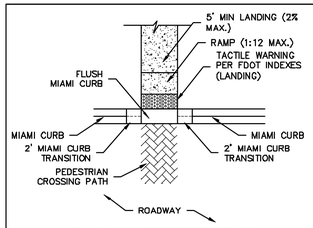

PLAN - RAMP PERPENDICULAR

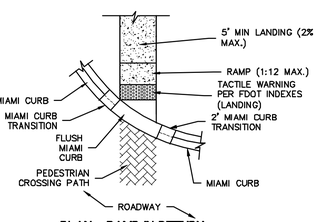

PLAN - RAMP IN RETURN

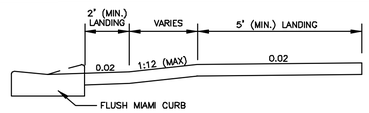

SECTION THROUGH RAMP RUN AND LANDING

NOTE:

1. ALL SIDEWALK RAMPS SHALL BE BUILT PER THE LATEST FDOT DESIGN STANDARDS AT THE TIME OF CONSTRUCTION.
2. ALL THE LATEST FDOT CRITERIA FOR RAMPS AND DETECTABLE WARNING SURFACES SHALL BE MET INCLUDING DESIGN STANDARDS – INDEX 304, STANDARD SPECIFICATIONS FOR ROAD AND BRIDGE CONSTRUCTION – SECTION 527, AND THE QUALIFIED PRODUCTS LIST.
3. FOR OTHER CURB TYPES OTHER THAN MIAMI CURB AND CONDITIONS, REFER TO FDOT DESIGN STANDARD INDEX 304 – PUBLIC SIDEWALK CURB RAMPS, LATEST EDITION.
4. ALL NEW DEVELOPMENT INTERSECTIONS SHALL CONFORM TO ANY AND ALL FDOT APPLICABLE DESIGN STANDARDS, LATEST EDITION. DIAGONAL RAMPS SHALL NOT BE APPLICABLE AT NEW INTERSECTIONS.
5. SIDEWALK SHALL NOT BE IN CONFLICT WITH A DRAINAGE INLET. IF THIS OCCURS, SIDEWALK OR STRUCTURE SHALL BE ADJUSTED IN THE FIELD.
6. THE PREFERRED COLOR FOR CURB CUT DETECTABLE WARNING SURFACES IS RED. HOWEVER, THE COLOR USED MUST BE A CONTRASTING COLOR.

REVISION DATE :	TRANSPORTATION TECHNICAL MANUAL	Hillsborough County Florida	MODIFIED HC STD DETAIL FOR SIDEWALK CURB RAMPS AT INTERSECTIONS TYPICAL DETAILS	DRAWING NO. TD-8 / SHEET NO. 1 OF 1

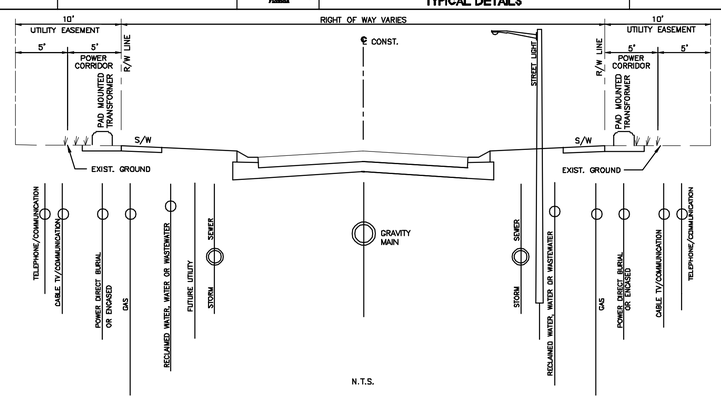

N.T.S.

1. RECLAIMED WATER LINE TO BE PLACED ON OPPOSITE SIDE OF ROAD TO THAT OF THE POTABLE WATER LINE.
2. HORIZONTAL DISTANCES AND DEPTH OF COVER FOR EACH UTILITY VARY IN ACCORDANCE WITH THE GUIDELINES OF HILLSBOROUGH COUNTY'S "WATER, WASTEWATER, AND RECLAIMED WATER TECHNICAL MANUAL" AND EACH RESPECTIVE UTILITY.

REVISION DATE :	TRANSPORTATION TECHNICAL MANUAL	Hillsborough County Florida	RECOMMENDED UTILITY LOCATIONS TYPICAL SECTION	DRAWING NO. TS-1 / SHEET NO. 1 OF 1

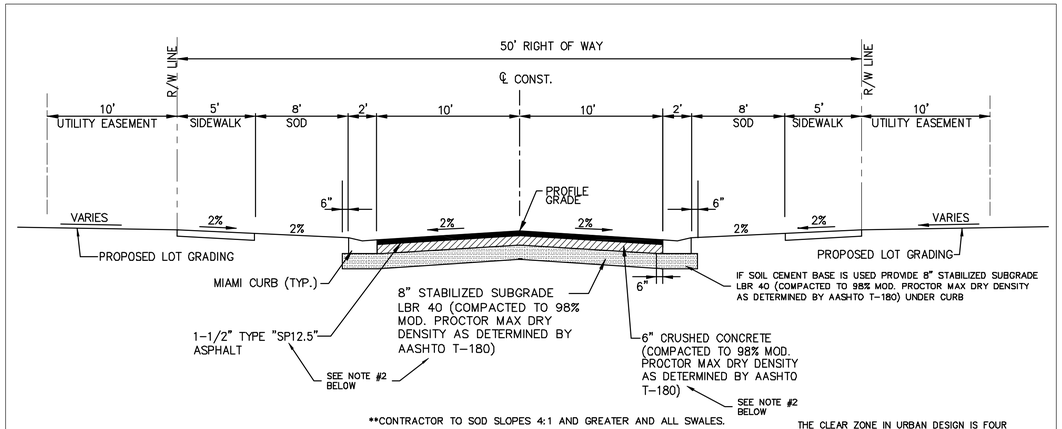

**CONTRACTOR TO SOD SLOPES 4:1 AND GREATER AND ALL SWALES.

THE CLEAR ZONE IN URBAN DESIGN IS FOUR FEET FROM BACK OF FACE OF CURB. OBJECTS, INCLUDING MATURE TREES ARE TO BE OUTSIDE CLEAR ZONE.

DESIGN PARAMETERS

DESIGN SPEED = 30 MPH

DESIGN STRUCTURAL NUMBER
(1.5")(0.44)+(6")(0.18)+(8")(0.08) = 2.38

NOTES:

1. ALL DIMENSIONS SHOWN ARE MINIMUM.
2. SEE APPROPRIATE SECTIONS OF THE FDOT STANDARD SPECIFICATIONS FOR CONSTRUCTION OF PAVEMENT AND STABILIZATION AND THE HC TTM SECTION 8 AND APPENDIX A FOR CRUSHED CONCRETE BASE REQUIREMENTS.
*3. PROVIDE 2' MINIMUM CLEARANCE FROM FENCES, WALLS, HEDGES, ABOVEGROUND UTILITIES OR IMPROVEMENTS, DROP OFFS, OR FROM THE TOPS OF BANKS WITH SLOPES STEEPER THAN 1 TO 4, THAT INTERFERE WITH THE SAFE, FUNCTIONAL USE OF THE SIDEWALK. INTERMITTENT ABOVEGROUND UTILITIES, OR MATURE TREES, 2' OR LESS IN DIAMETER MAY BE PLACED IN THIS 2' STRIP AS FAR FROM THE SIDEWALK AS POSSIBLE, IF NOT IN THE CLEAR ZONE.

UNDERDRAIN CRITERIA

WHERE UNDERDRAIN IS SHOWN IN PLANS 0.5' OF SELECT SAND (S) OR SPECIAL SAND SELECT SAND (S+) AS DEFINED IN FDOT INDEX 505 LATEST EDITION SHALL BE PLACED BELOW THE CRUSHED CONCRETE BASE TO PROVIDE POSITIVE DRAINAGE IN ACCORDANCE WITH HC STORMWATER TECH MANUAL TABLE 12-1

LOCAL URBAN ROADWAY (NOT TO SCALE)

LOCAL URBAN ROAD.
ALTERNATIVE PAVEMENT SECTION

- TYPE SP STRUCTURAL COURSE (1-1/2") (SP12-5)
- 8" SOIL CEMENT *
- 12" COMPACTED SUBGRADE (MIN LBR 20) **

DESIGN STRUCTURAL NUMBER
(1.5")(0.44)+(8")(0.15)(12")(0.04) = 2.34

* (300 PSI DESIGN MIX WITH 100 PSI @ 7 DAYS) PER HILLSBOROUGH COUNTY "TRANSPORTATION TECHNICAL MANUAL PERMISSIVE REVISION"

** THE SUBGRADE FOR SOIL CEMENT SHALL BE PROOF ROLLED WITH SUITABLE COMPACTION EQUIPMENT TO ACHIEVE A DENSITY OF NINETY-EIGHT (98) PERCENT MODIFIED PROCTOR AASHTO T-180 FOR A MINIMUM DEPTH OF TWELVE (12) INCHES. THE SUBGRADE BENEATH A PROPOSED SOIL CEMENT BASE SHALL HAVE A MINIMUM (LBR) OF TWENTY (20). ANY EXISTING SOIL MEETING THE DENSITY AND LBR CRITERIA SPECIFIED ABOVE MAY REMAIN IN PLACE AND THE ASSOCIATED STRUCTURAL VALUE UTILIZED IN THE PROPOSED PAVEMENT DESIGN.

SIDEWALK / PATH CONSTRUCTION NOTES:

ALL SIDEWALKS TO BE CONSTRUCTED PER H.C. TTM SECTION 2.9, INCLUDING INCREASING SIDEWALK / PATH THICKNESS TO 6" ADJACENT TO RETENTION PONDS.

Q:\CIVIL5163\905\000\Production\Drawings\DET-TYP.dwg , February 11, 2015 10:39 AM , King Engineering Associate Inc.
© COPYRIGHT - 2014 KING ENGINEERING ASSOCIATES, INC. DRAWINGS AND CONCEPTS MAY NOT BE USED OR REPRODUCED WITHOUT WRITTEN PERMISSION. CONSULT THE WRITTEN OR ELECTRONIC VERSION OF THIS DOCUMENT AS THE ONLY VERSION TO BE RELIED UPON FOR CONFORMANCE WITH CHAPTER 119.

DESIGNED	JLW
DRAWN	JLW
CHECKED	TLT/AGK
Q.C.	LJK

THE SIGNATURE OF THE QUALITY CONTROL OFFICER IN THIS SPACE INDICATES THAT ALL REQUIRED PERMITS HAVE BEEN OBTAINED AND THAT CONSTRUCTION IS AUTHORIZED TO COMMENCE.

MER 2/5/15

King ENGINEERING ASSOCIATES, INC.
4921 Memorial Highway
One Memorial Center, Suite 300
Tampa, Florida 33634
Phone 813 880-8881
Fax 813 880-8882
www.kingengineering.com
Engineering License #2610

THE OAKS AT SHADY CREEK, PHASE 2

FOR

LENNAR HOMES, LLC
4600 WEST CYPRESS ST. SUITE 200
TAMPA, FL. 34683
813-574-5653

TYPICAL SECTIONS AND DETAILS

NO.	DATE	DESCRIPTION	APP'D BY

JOB NO.	5163-905-000
DATE:	10-28-2014
SCALE:	AS SHOWN
SHEET NO.	C7.01

HC FINAL SET
FEB. 11, 2015

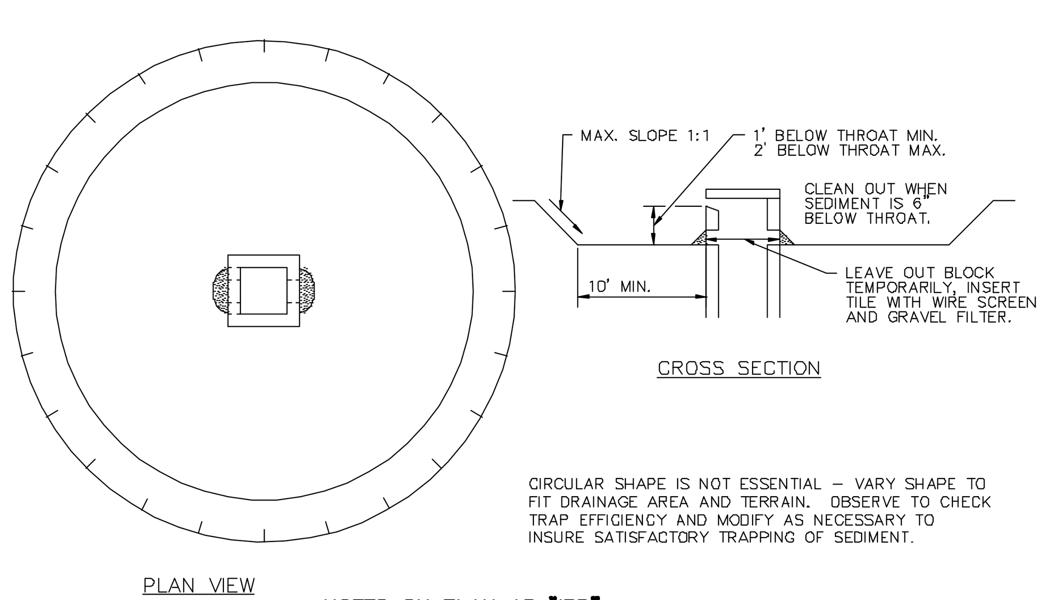

CIRCULAR SHAPE IS NOT ESSENTIAL – VARY SHAPE TO FIT DRAINAGE AREA AND TERRAIN. OBSERVE TO CHECK TRAP EFFICIENCY AND MODIFY AS NECESSARY TO INSURE SATISFACTORY TRAPPING OF SEDIMENT.

NOTED ON PLAN AS "IPD"

TEMPORARY SEDIMENT TRAP AT STORM DRAIN INLET

SD1802 N.T.S.

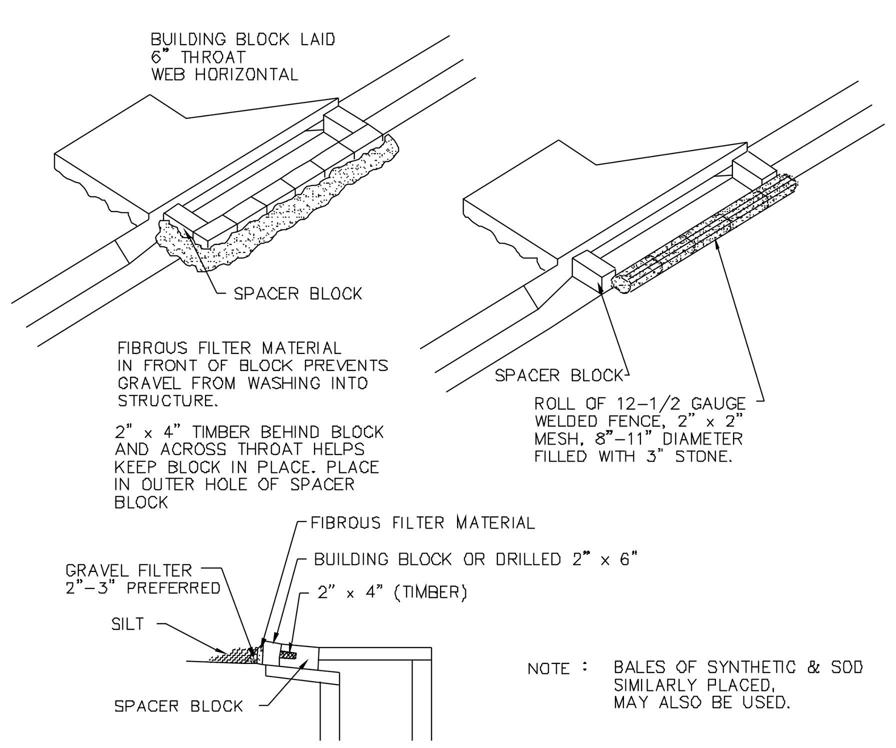

NOTE : BALES OF SYNTHETIC & SOD SIMILARLY PLACED, MAY ALSO BE USED.

TEMPORARY SEDIMENT TRAP AT CURB INLET

N.T.S.

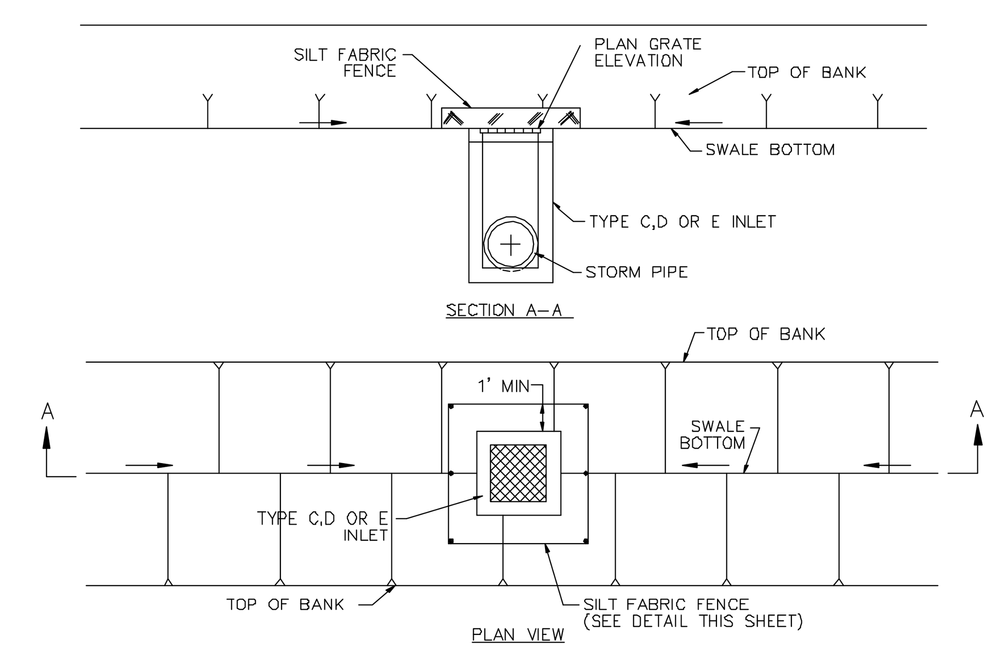

NOTES:

1. CONTRACTOR TO INSTALL TEMPORARY PLYWOOD OVER GRATE OF INLET DURING CONSTRUCTION UNTIL GRATE IS PUT IN PLACE.
2. MIRAFI FABRIC IS TO BE PLACED UNDER GRATE DURING CONSTRUCTION TO LIMIT SILTS FROM ENTERING THE STRUCTURE.
3. SILT FENCE TO BE MAINTAINED BY CONTRACTOR DURING CONSTRUCTION AND LEFT IN GOOD CONDITION AT COMPLETION OF SITE WORK.
4. BUILDING DIVISION SHALL BE RESPONSIBLE FOR MAINTENANCE OF SILT FENCES AND SEDIMENT IN PIPES AFTER ACCEPTANCE OF SITE WORK.

TEMPORARY SILT FENCE

N.T.S.

EROSION AND SEDIMENTATION CONTROL NOTES

1. THE INSTALLATION OF TEMPORARY EROSION CONTROL BARRIERS SHALL BE COORDINATED WITH THE CONSTRUCTION OF THE PERMANENT EROSION CONTROL FEATURES TO THE EXTENT NECESSARY TO ASSURE ECONOMICAL, EFFECTIVE AND CONTINUOUS CONTROL OF EROSION AND WATER POLLUTION THROUGHOUT THE LIFE OF THE CONSTRUCTION PHASE.
2. THE TYPE OF EROSION CONTROL BARRIERS USED SHALL BE GOVERNED BY THE NATURE OF THE CONSTRUCTION OPERATION AND SOIL TYPE THAT WILL BE EXPOSED. SILTY AND CLAYEY MATERIAL USUALLY REQUIRE SOLID SEDIMENT BARRIERS TO PREVENT TURBID WATER DISCHARGE, WHILE SANDY MATERIAL MAY NEED ONLY SILT SCREENS OR SYNTHETIC BALES TO PREVENT EROSION. FLOATING TURBIDITY CURTAINS SHOULD BE USED IN OPEN WATER SITUATIONS. DIVERSION DITCHES OR SWALES MAY BE REQUIRED TO PREVENT TURBID STORMWATER RUNOFF FROM BEING DISCHARGED TO WETLANDS OR OTHER WATER BODIES. IT MAY BE NECESSARY TO EMPLOY A COMBINATION OF BARRIERS, DITCHES, AND OTHER EROSION/TURBIDITY CONTROL MEASURES IF CONDITIONS WARRANT.
3. WHERE PUMPS ARE TO BE USED TO REMOVE TURBID WATERS FROM THE CONSTRUCTION AREA, THE WATER SHALL BE TREATED TO REDUCE TURBIDITY TO STATE WATER QUALITY STANDARDS PRIOR TO DISCHARGE TO THE WETLANDS. TREATMENT METHODS INCLUDE, FOR EXAMPLE, TURBID WATER BEING PUMPED INTO GRASSED SWALES OR APPROPRIATE VEGETATED AREAS (OTHER THAN UPLAND PRESERVATION AREAS AND WETLAND BUFFERS), SEDIMENT BASINS, OR CONFINED BY AN APPROPRIATE ENCLOSURE SUCH AS TURBIDITY BARRIERS, AND KEPT CONFINED UNTIL ITS TURBIDITY LEVEL MEETS STATE WATER QUALITY STANDARDS.
4. THE CONTRACTOR SHALL PROVIDE ROUTINE MAINTENANCE OF PERMANENT AND TEMPORARY EROSION CONTROL FEATURES UNTIL THE PROJECT IS COMPLETE AND ALL BARED SOIL STABILIZED. SILTATION ACCUMULATIONS GREATER THAN THE LESSER OF 12 INCHES OR ONE-HALF THE DEPTH OF THE SILTATION CONTROL BARRIER SHALL BE IMMEDIATELY REMOVED AND PLACED IN UPLAND AREAS.
5. WATER REMAINING IN THE EXCAVATIONS AFTER CONSTRUCTION MUST BE KEPT CONFINED WITHIN THE EXCAVATIONS PRIOR TO DISCHARGE (IF APPLICABLE), UNTIL THE TURBIDITY LEVEL OF THE POND WATER MEETS STATE WATER QUALITY STANDARDS.
6. NO CLAY MATERIAL SHALL BE LEFT EXPOSED IN THE EXCAVATIONS. IF CLAY OR SANDY CLAYS ARE LEFT EXPOSED AT THE PERMITTED DEPTH, THE CONTRACTOR SHALL OVER EXCAVATE THE POND'S BOTTOM AND SIDE SLOPES BY A MINIMUM OF 12 INCHES AND BACKFILL WITH CLEAN SANDS.
7. PROVIDE ALL DISTURBED AREAS WITHIN THE LIMITS OF THE WORK WITH TEMPORARY SOIL EROSION CONTROL AND SEDIMENT CONTROL, UTILIZING EARTH DAMS & PONDS, GRADE TO DRAIN SWALES, SETTLING BASINS, SILT FENCES, STONE FILTERS, SYNTHETIC BALE FILTERS, ETC., TREATING ALL SOIL SURFACES WITH SEEDED TOPSOIL AND / OR MULCH AFTER GRADING.
8. ALL SOIL EROSION AND SEDIMENT CONTROL PRACTICES SHALL BE INSTALLED PRIOR TO ANY MAJOR SOIL DISTURBANCE OR IN THEIR PROPER SEQUENCE, AND MAINTAINED UNTIL PERMANENT PROTECTION IS ESTABLISHED.
9. CONSTRUCTION OPERATIONS SHALL BE CARRIED OUT IN SUCH A MANNER THAT EROSION AND AIR AND WATER POLLUTION WILL BE MINIMIZED. STATE AND LOCAL LAWS SHALL BE COMPLIED WITH AT ALL TIMES.
10. TO MINIMIZE SOIL EROSION, PROPOSED LAND ALTERATION ACTIVITIES SHALL NOT UNNECESSARILY REMOVE EXISTING VEGETATION AND ALTER EXISTING TOPOGRAPHY. ADEQUATE PROTECTION MEASURES (I.E. SYNTHETIC BALES, BAFFLES, SODDING AND SANDBAGGING) SHALL BE PROVIDED, AS NECESSARY, TO MINIMIZE EROSION AND DOWNSTREAM SEDIMENTATION CAUSED BY SURFACE WATER RUN-OFF ON EXPOSED LAND SURFACES.
11. PERMANENT VEGETATION SHALL BE BY SEEDING OR SODDING ALL EXPOSED AREAS WITHIN THREE DAYS AFTER FINAL GRADING. MULCH SHALL BE USED AS NECESSARY FOR PROTECTION UNTIL 75% GROWTH IS ESTABLISHED. AT THE TIME WHEN THE SITE PREPARATION FOR PERMANENT VEGETATIVE STABILIZATION IS GOING TO BE ACCOMPLISHED, ANY SOIL WHICH WILL NOT PROVIDE A SUITABLE ENVIRONMENT TO SUPPORT ADEQUATE VEGETATIVE GROUND COVER SHALL BE REMOVED OR TREATED IN SUCH A WAY AS TO PERMANENTLY ADJUST THE SOIL CONDITIONS AND RENDER IT SUITABLE FOR VEGETATIVE GROUND COVER.
12. ALL NEW EROSION AND SILT CONTROL METHODS AND LOCATIONS INDICATED ON THIS DRAWING ARE FOR START-UP AND GENERAL REFERENCE ONLY AND SHALL BE ADJUSTED, AS REQUIRED, TO SUIT THE PROCESS OF THE CONSTRUCTION.
13. ANY AREAS SUBJECT TO EROSION MUST BE ADEQUATELY STABILIZED WITH VEGETATIVE MATERIAL THAT WILL, WITHIN A REASONABLE TIME FRAME, DETER SOIL DISTURBANCE. SODDING, PLUGGING, SPRIGGING. OR SEEDING IS ACCEPTABLE FOR STABILIZATION; HOWEVER, SODDING MAY BE REQUIRED IN AREAS OF EROSION-PRONE SOILS OR WHERE SLOPES ARE GREATER THAN 5:1. VEGETATION OTHER THAN GRASS IS ACCEPTABLE UNLESS OTHERWISE SPECIFIED.

    FOR COMMERCIAL SITE DEVELOPMENT PROJECTS, NO MORE THAN 50% OF THE LANDSCAPED AREA MAY BE PLANTED WITH SHALLOW-ROOTED (I.E., ST AUGUSTINE) TURF GRASS VARIETIES. THESE TURF GRASS VARIETIES SHALL BE CONSOLIDATED IN AND LIMITED TO AREAS THAT ARE PROVIDED WITH CENTRAL AUTOMATIC IRRIGATION SYSTEMS. A METHOD OF STABILIZATION MUST BE SHOWN ON THE SITE DEVELOPMENT CONSTRUCTION PLANS.
14. SEE PGD PLANS FOR ADDITIONAL EROSION CONTROL LOCATION INFORMATION AND DETAILS.
15. CONTRACTOR TO COMPLY WITH ALL REGULATIONS AS SET FORTH BY THE FDEP NPDES STORMWATER REGULATORY PROGRAM.
16. CONTRACTOR TO CONSTRUCT PROPOSED STORMWATER PONDS IN EITHER CELLS OR SEQUENCED SO THAT THE FIRST PONDS FUNCTION AS SEDIMENT BASINS TO SEPARATE SUSPENDED SOLIDS FROM PRODUCED GROUNDWATER. ALL PRODUCED GROUNDWATER MUST MEET CRITERIA OF "STATE OF FLORIDA DEPARTMENT OF ENVIRONMENTAL PROTECTION GENERIC PERMIT FOR THE DISCHARGE OF PRODUCED GROUNDWATER FROM ANY NON-CONTAMINATED SITE ACTIVITY" EFFECTIVE DATE FEBRUARY 14, 2000; DOCUMENT NUMBER 62-621.300(2).
17. DURING LAND ALTERATION AND CONSTRUCTION ACTIVITIES, IT SHALL BE UNLAWFUL TO REMOVE VEGETATION BY GRUBBING OR TO PLACE SOIL DEPOSITS, DEBRIS, SOLVENTS, CONSTRUCTION MATERIAL, MACHINERY OR OTHER EQUIPMENT OF ANY KIND WITHIN THE DRIPLINE OF A TREE TO REMAIN ON THE SITE UNLESS OTHERWISE APPROVED BY THE COUNTY.

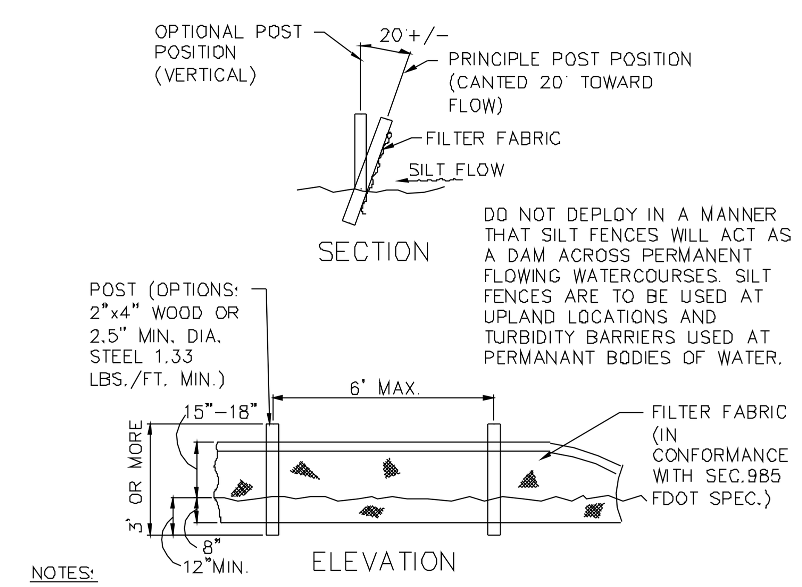

DO NOT DEPLOY IN A MANNER THAT SILT FENCES WILL ACT AS A DAM ACROSS PERMANENT FLOWING WATERCOURSES. SILT FENCES ARE TO BE USED AT UPLAND LOCATIONS AND TURBIDITY BARRIERS USED AT PERMANANT BODIES OF WATER.

NOTES:

1. FOR ADDITIONAL INFORMATION AND DETAILS, SEE F.D.O.T. INDEX No. 102
2. ADDITIONAL POSTS AND RAILS MAY BE NECESSARY TO SECURE AND SUPPORT BARRIERS.
3. ADDITIONAL FENCE LENGTHS MAY BE REQUIRED BY THE COUNTY ENGINEER OR BY REGULATORY AGENCIES.

TYPE III SILT FENCE

N.T.S.

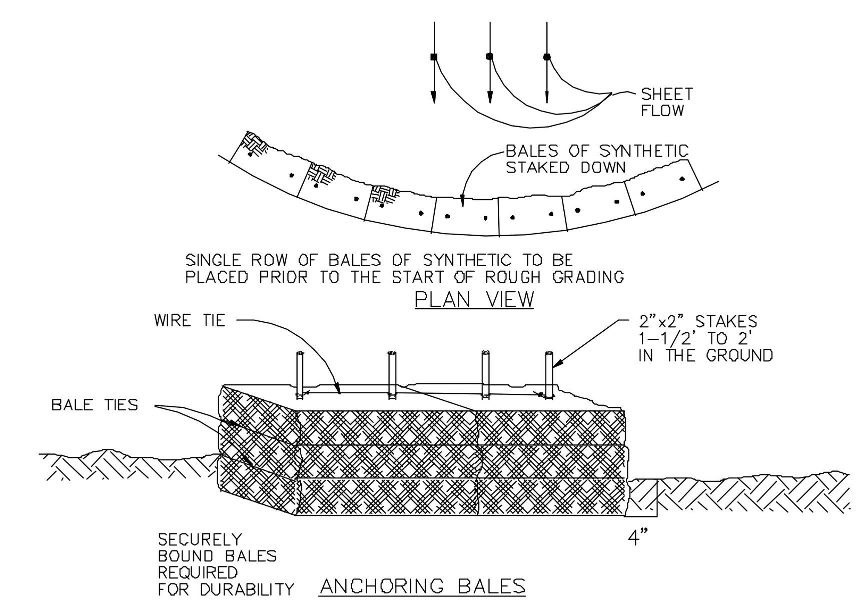

TEMPORARY SYNTHETIC BALE SEDIMENT BARRIER

N.T.S.

PROTECTIVE BARRIER REQUIREMENTS AND SPECIFICATIONS FOR EXISTING TREES TO REMAIN

PROTECTIVE BARRIERS are used during land alteration and construction activities to protect trees and natural areas to be retained on a site.

PROTECTIVE BARRIERS must be erected around TREES to be retained within an area where land alteration and construction activities will occur as well as along NATURAL AREAS where such areas are adjacent to permitted land alteration or construction activities. A PROTECTIVE BARRIER must remain in place until the land alteration and construction activities are completed or until commencement of grade finishing and sodding. No ground disturbance must occur within the barricaded area. The following represents the County's minimum protective barrier specifications.

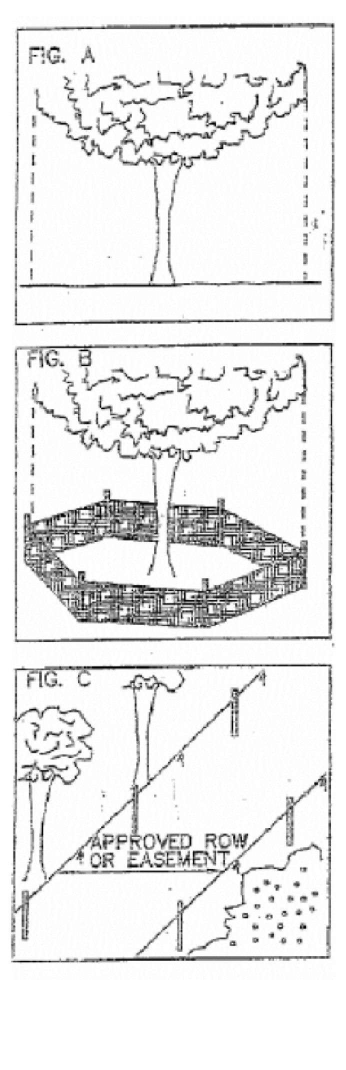

1. TREES – To restrict access into the area within the CANOPY DRIPLINE of a tree, a physical structure not less than 3 feet in height, comprised of wood or other suitable material, is placed around the tree at the CANOPY DRIPLINE, except where land alteration or construction activities are approved within the CANOPY DRIPLINE.

   The CANOPY DRIPLINE of a tree is the imaginary, vertical line that extends downward from the outermost tips of the tree's branches to the ground. Fig. A

   BARRIER SPECIFICATIONS FOR TREES:

   Four corner upright stakes of no less than 2"x 2" lumber connected by horizontal members of no less than 1"x 4" lumber; or upright stakes spaced at 5' intervals of no less than 2"x 2" lumber connected by silt screen fabric or material of comparable durability. Fig. B

2. NATURAL AREAS – To restrict access into areas where land alteration and construction activities are not authorized a physical structure not less than 3 feet in height is placed along the perimeter of such areas.

   BARRIER SPECIFICATIONS FOR NATURAL AREAS:

   Upright stakes of no less than 2"x 2" lumber spaced no more than 25' apart and connected by twine flagged with plastic surveying tape at regular intervals of 5-10'. Fig. C. Other methods of demarcation will be considered depending upon the characteristics of the site.

   WHY A BARRIER

   1. To protect all above ground portions of trees and other significant vegetation from mechanical damage.
   2. To protect root systems from compaction.
   3. To provide awareness of protected areas to equipment operators.

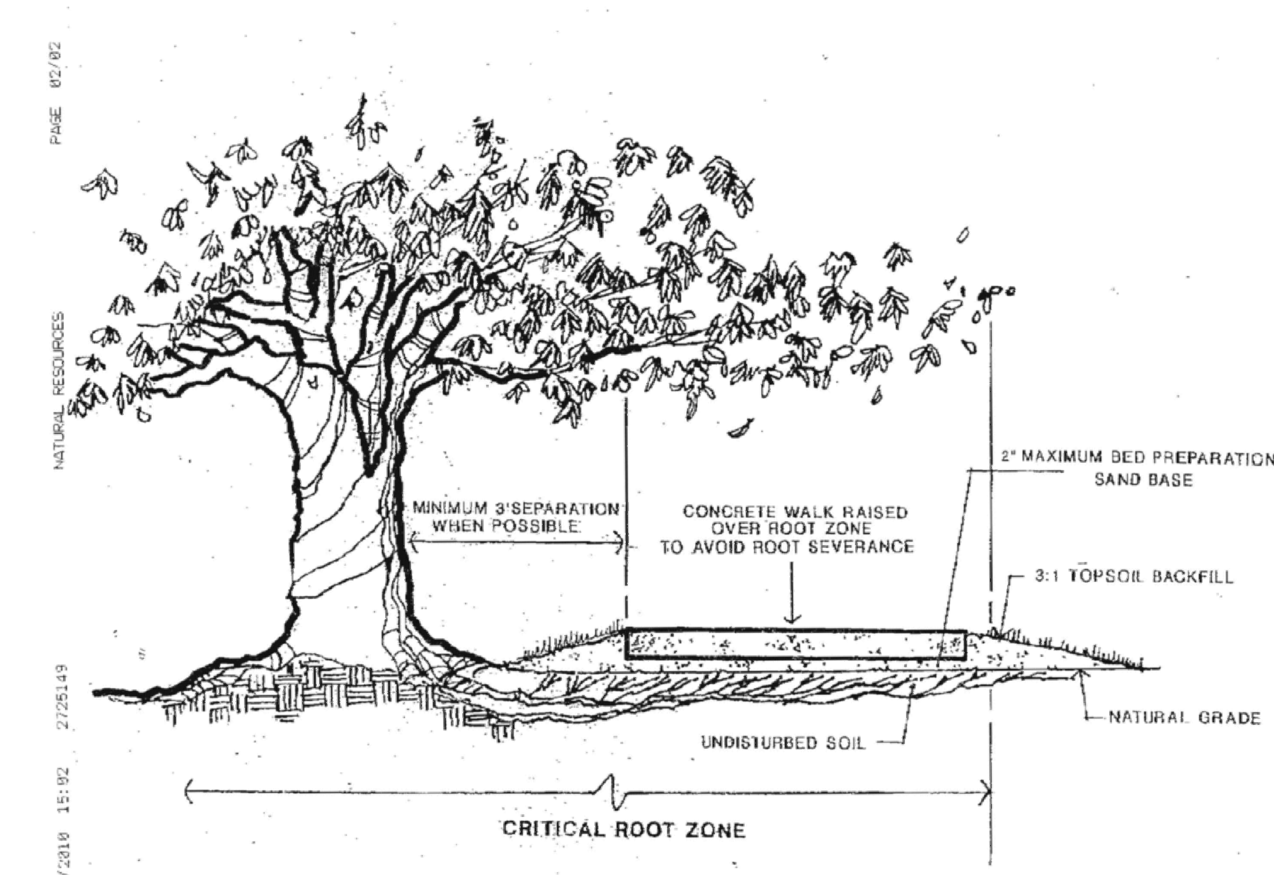

CONCRETE WALK OVER CRITICAL ROOT ZONE DETAIL NO SCALE

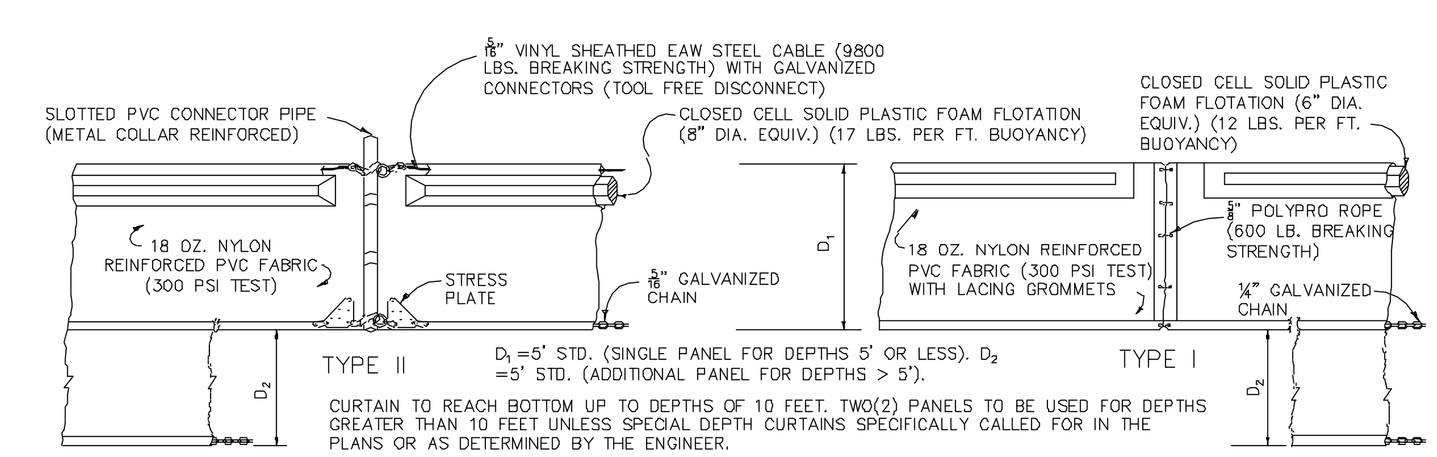

D_1 =5' STD. (SINGLE PANEL FOR DEPTHS 5' OR LESS). D_2 =5' STD. (ADDITIONAL PANEL FOR DEPTHS > 5').

CURTAIN TO REACH BOTTOM UP TO DEPTHS OF 10 FEET. TWO(2) PANELS TO BE USED FOR DEPTHS GREATER THAN 10 FEET UNLESS SPECIAL DEPTH CURTAINS SPECIFICALLY CALLED FOR IN THE PLANS OR AS DETERMINED BY THE ENGINEER.

NOTICE: COMPONENTS OF TYPES I AND II MAY BE SIMILAR OR IDENTICAL TO PROPRIETARY DESIGNS. ANY INFRINGEMENT ON THE PROPRIETARY RIGHTS OF THE DESIGNER SHALL BE THE SOLE RESPONSIBILITY OF THE USER. SUBSTITUTIONS FOR TYPES I AND II SHALL BE AS APPROVED BY THE ENGINEER.

FLOATING TURBIDITY BARRIERS

N.T.S.

Q:\CIVIL\5163\905\000\Production\Drawings\DET-ERO.dwg , February 11, 2015 10:39 AM , King Engineering Associate Inc.

© COPYRIGHT 2014 KING ENGINEERING ASSOCIATES, INC. DRAWINGS AND CONCEPTS MAY NOT BE USED OR REPRODUCED WITHOUT WRITTEN PERMISSION CONSENT IS HEREBY GRANTED SPECIFICALLY TO GOVERNMENTAL AGENCIES TO REPRODUCE THIS DOCUMENT IN COMPLIANCE WITH F.S. CHAPTER 119.

DESIGNED	JLW
DRAWN	JLW
CHECKED	TLT/AGK
Q.C.	LFK

THE SIGNATURE OF THE QUALITY CONTROL OFFICER IN THIS SPACE INDICATES THAT ALL REQUIRED PERMITS HAVE BEEN OBTAINED AND THAT CONSTRUCTION IS AUTHORIZED TO COMMENCE.

MER 2/5/15

King
ENGINEERING ASSOCIATES, INC.

4921 Memorial Highway
One Memorial Center, Suite 300
Tampa, Florida 33634
Phone 813 880-8881
Fax 813 880-8882
www.kingengineering.com
Engineering License #2610

THE OAKS AT SHADY CREEK, PHASE 2

FOR

LENNAR HOMES, LLC
4600 WEST CYPRESS ST. SUITE 200
TAMPA, FL. 34683
813-574-5653

EROSION CONTROL DETAILS

NO.	DATE	DESCRIPTION	APP'D BY

JOB NO.	5163-905-000
DATE:	10-28-2014
SCALE:	AS SHOWN
SHEET NO.	C8.01

HC FINAL SET
FEB. 11, 2015

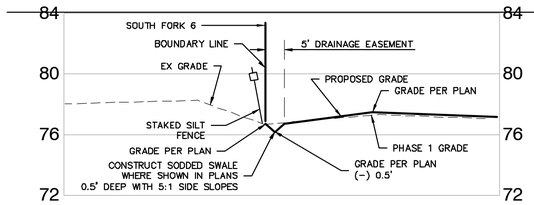

SECTION AA C4.01 / AA C4.02

SCALE: 1"=20' HORZ.
SCALE: 1"=5' VERT.

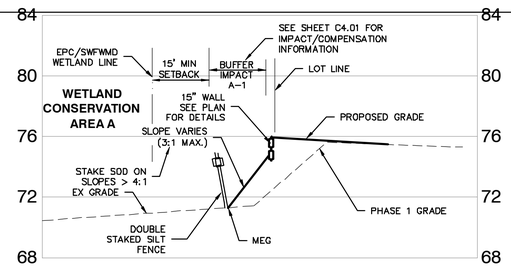

SECTION BB C4.01

SCALE: 1"=20' HORZ.
SCALE: 1"=5' VERT.

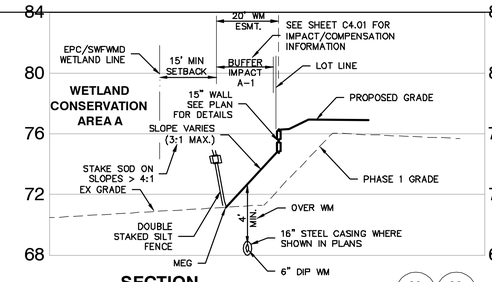

SECTION CC C4.01 / CC C5.01

SCALE: 1"=20' HORZ.
SCALE: 1"=5' VERT.

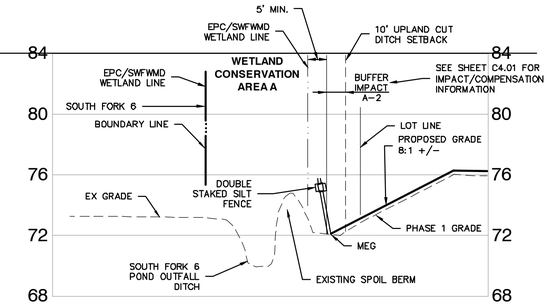

SECTION DD C4.01

SCALE: 1"=20' HORZ.
SCALE: 1"=5' VERT.

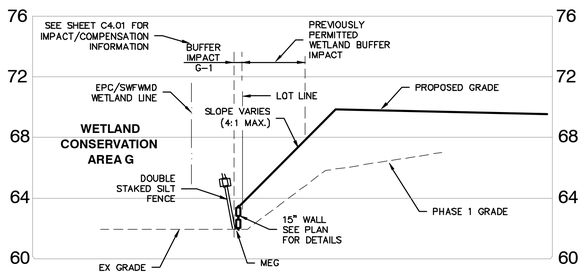

SECTION EE C4.04

SCALE: 1"=20' HORZ.
SCALE: 1"=5' VERT.

BUFFER SETBACK ENHANCMENT NOTES

MONITORING REQUIREMENTS:

Monitoring of planted areas shall consist of the following:

- A time–zero report, listing species and #s planted, upon completion of the plantings shall be provided to the Natural Resources Section of PGMD no later than 30 days following planting completion.
- Two annual reports that list survival % per species and any required replants shall be provided to the Natural Resources Section of PGMD no later than 30 days following data collection.
- Planted shrub species must maintain a minimum 85% survival rate with annual replanting if needed. Exotic and nuisance species (reference most current Florida Exotic Pest Plan Council list) cover within the planting zones must be maintained below 10%
- For nuisance species control programs areas, all exotic and nuisance species must be removed during the initial control event(s) and total nuisance species coverage must be maintained below 10% for 2 years thereafter.

Buffer Planting Plan

SPECIES	COMMON NAME	SPACING	SIZE	Number of Units
Myrica cerifera	Wax Myrtle	5' O.C.	3 Gal.	41
Serenoa repens	Saw Palmetto	5' O.C.	3 Gal.	41
Callicarpa americana	Beautyberry	5' O.C.	3 Gal.	41
Spartina bakeri	Sand Cordgrass	5' O.C.	4" pot	60

Notes: 1) Plants to be obtained from local, licensed nursery.
2) O.C. = On Center
3) Plants to be installed in naturalistic groupings.

Q:\CIVIL\5163\905\000\Production\Drawings\DET.GRD.dwg , February 11, 2015 10:40 AM , King Engineering Associate Inc.
© COPYRIGHT 2014 KING ENGINEERING ASSOCIATES, INC. DRAWINGS AND CONCEPTS MAY NOT BE USED OR REPRODUCED WITHOUT WRITTEN PERMISSION
CONTACT IS HEREBY GRANTED EXCLUSIVELY TO GOVERNMENTAL AGENCIES TO REPRODUCE THIS DOCUMENT IN COMPLIANCE WITH FL CHAPTER 119.

DESIGNED JLW
DRAWN JLW
CHECKED TLT/AGK
Q.C. LFK

THE SIGNATURE OF THE QUALITY CONTROL OFFICER IN THIS SPACE INDICATES THAT ALL REQUIRED PERMITS HAVE BEEN OBTAINED AND THAT CONSTRUCTION IS AUTHORIZED TO COMMENCE.

MSR 2/5/15

King ENGINEERING ASSOCIATES, INC.
4921 Memorial Highway
One Memorial Center, Suite 300
Tampa, Florida 33634
Phone 813 880-8881
Fax 813 880-8882
www.kingengineering.com
Engineering License #2610

THE OAKS AT SHADY CREEK, PHASE 2
FOR
LENNAR HOMES, LLC
4600 WEST CYPRESS ST. SUITE 200
TAMPA, FL. 34683
813-574-5653

GRADING DETAILS & WETLAND ENHANCEMENT PLANTING DETAILS

NO.	DATE	DESCRIPTION	APPD BY

JOB NO. 5163-905-000
DATE: 10-28-2014
SCALE: AS SHOWN
SHEET NO. C9.01
HC FINAL SET
FEB. 11, 2015

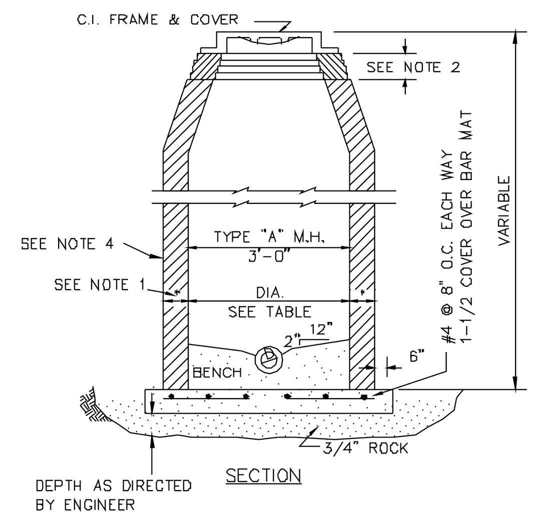

TABLE:

DIA.	FOR PIPES
4'-0"	24" & UNDER
5'-0"	30" & 36"
6'-0"	42" & OVER

NOTE: 3'-0" DIAMETER TYPE "A" MANHOLE SHALL BE USED AT THE END OF ALL 8" SEWERS WHERE MANHOLE DEPTH DOES NOT EXCEED 4'-0" OR EXCEPT AS NOTED OTHERWISE IN THE PLANS.

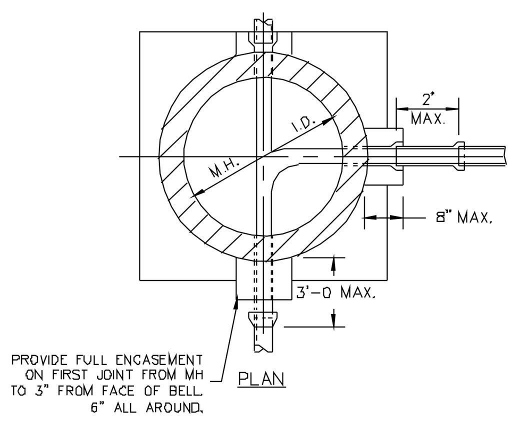

NOTE: (FOR PRECAST MANHOLE)

1. ALL DIMENSIONS AND SPECIFICATIONS FOR BRICK MANHOLES SHOWN HEREON APPLY TO PRECAST MANHOLES' EXCEPT WALL THICKNESS SHALL BE 6" UP TO 12' DEPTH AND 8" FOR DEPTHS OVER 12'. REINFORCED PER ASTM C-478 AND WITH CONCRETE CONSISTING OF 4000 PSI AT 28 DAYS, TYPE II PORTLAND CEMENT.
2. ALL RISER UNITS SHALL HAVE A MINIMUM HEIGHT OF 12" WITH THE CONCENTRIC CONE SET BETWEEN 2 ½" AND 14 ½" BELOW THE BOTTOM OF MANHOLE COVER FRAME.
3. ALL TONGUE AND GROOVE JOINTS SHALL BE JOINED AND COMPLETELY SEALED PER SPECIFICATION SECTION GS.
4. ALL INTERIOR AND EXTERIOR MANHOLE SURFACES SHALL BE PREPARED FOR COATING AND COATED PER SPECIFICATION SECTION GS.
5. SUBMITTAL OF APPROVAL SHALL BE MADE OF PRECAST MANHOLE SHOP DRAWINGS, MANHOLE FRAMES AND COVERS, METHODS TO BE USED IN SEALING, JOINING AND COATING MANHOLE SECTIONS BEFORE CONSTRUCTION BEGINS.
6. GASKETED MANHOLE CONNECTORS SHALL BE SUBMITTED TO ENGINEER OF RECORD PRIOR TO USE. FOR GROUTED CONNECTION USING PVC PIPE, A SUITABLE ADAPTER IS REQUIRED.

STORM MANHOLE

NTS

NTS

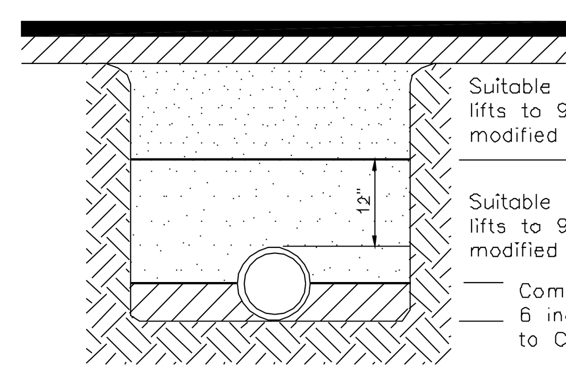

NOTES:

1. TYPE 2 TRENCH IS DEFINED AS A FLAT-BOTTOM TRENCH. BACKFILL LIGHTLY CONSOLIDATED TO CENTERLINE OF PIPE.
2. THIS STANDARD SHALL BE UTILIZED IN THE ABSENCE OF SPECIFIC STANDARDS. THE STANDARD OF THE AGENCY CONTROLLING THE RIGHT-OF-WAY SHALL GOVERN UNLESS OTHERWISE DIRECTED BY THE ENGINEER.
3. SUITABLE BACKFILL SHALL BE DEFINED AS MATERIAL FREE FROM CINDERS, ASHES, REFUSE, ORGANIC MATTER, BOULDERS, ROCKS OR STONES, OR OTHER MATERIAL THAT IN THE OPINION OF THE ENGINEER IS UNSUITABLE.

TYPICAL TRENCHING, BEDDING AND BACKFILL DETAIL FOR PAVED AREAS

NTS

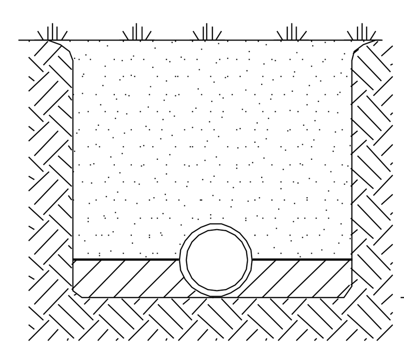

NOTES:

1. TYPE 2 TRENCH IS DEFINED AS A FLAT-BOTTOM TRENCH. BACKFILL LIGHTLY CONSOLIDATED TO CENTERLINE OF PIPE.
2. THIS STANDARD SHALL BE UTILIZED IN THE ABSENCE OF SPECIFIC STANDARDS. THE STANDARD OF THE AGENCY CONTROLLING THE RIGHT-OF-WAY SHALL GOVERN UNLESS OTHERWISE DIRECTED BY THE ENGINEER.
3. SUITABLE BACKFILL SHALL BE DEFINED AS MATERIAL FREE FROM CINDERS, ASHES, REFUSE, ORGANIC MATTER, BOULDERS, ROCKS OR STONES, OR OTHER MATERIAL THAT IN THE OPINION OF THE ENGINEER IS UNSUITABLE.

TYPICAL TRENCHING, BEDDING AND BACKFILL DETAIL FOR UNPAVED AREAS

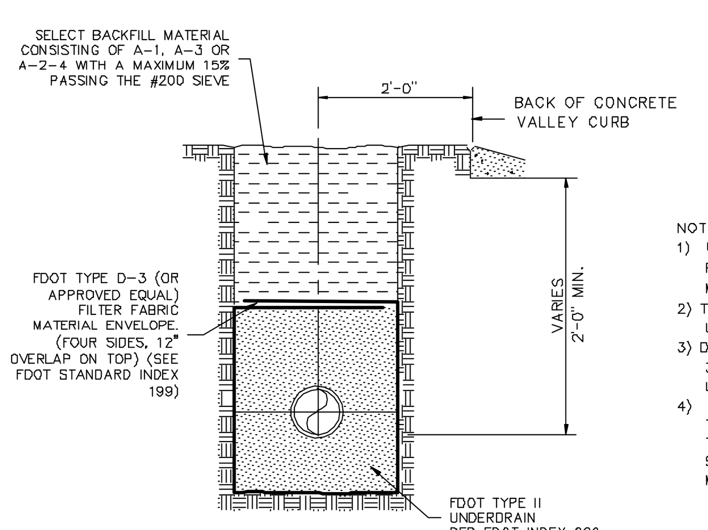

NOTES
1) USE NON-PERFORATED PIPE UNDER ROADWAYS. (CONTINUE FILTER MATERIAL)
2) THE MINIMUM GRADE OF THE UNDERDRAIN PIPE SHALL BE 0.2%.
3) DIAMETER OF PERFORATIONS SHALL BE 3/16" TO 3/8". DO NOT USE UNDERDRAIN UNDERNEATH ROADWAYS.
4) UNDERDRAIN AND CLEANOUT CAP IS TO BE CONSTRUCTED IN ACCORDANCE TO THE HILLSBOROUGH COUNTY STORMWATER MANAGMENT TECHNICAL MANUAL, SECTION 10.1.

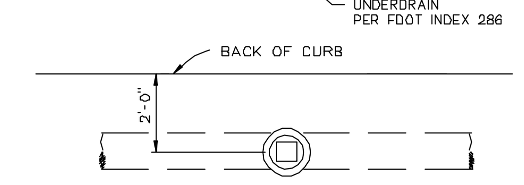

NOTE
CLEANOUT CAP IS TO EXTEND TO THE GROUND AND ALL CLEANOUT LOCATIONS SHALL BE MARKED, IN A PERMANENT MANNER, ALONG THE ROADWAY CURB OR ON OTHER APPROPRIATE AND PERMANENT FIXTURES AS APPROVED BY THE COUNTY ADMINISTRATOR.

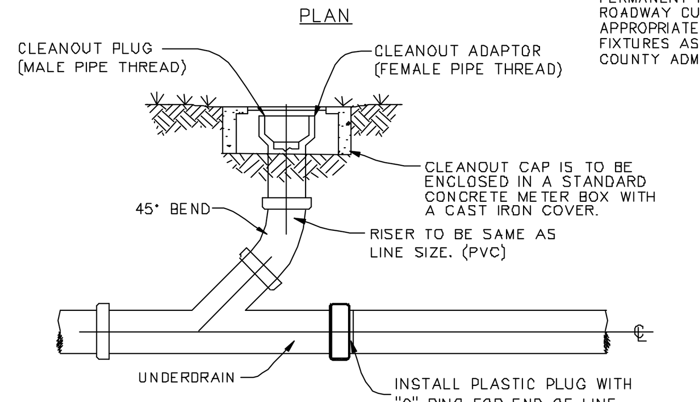

UNDERDRAIN AND CLEANOUT

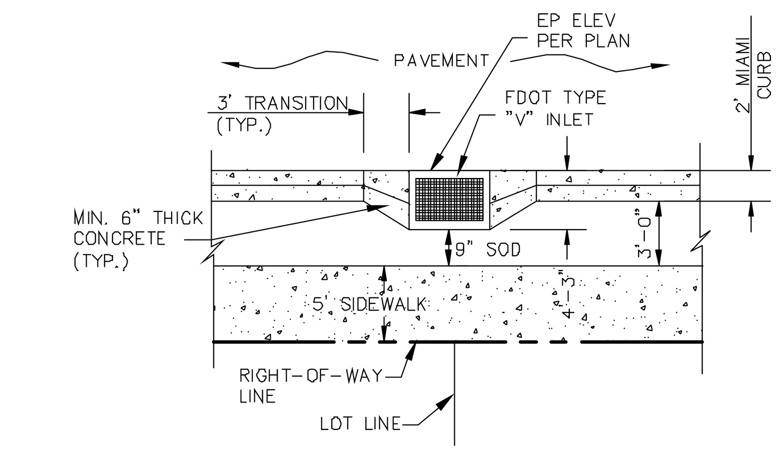

NOTE
INLET TO BE CENTERED ON LOT LINE IF APPLICABLE.

CURB TRANSITION DETAIL FOR FDOT TYPE V INLET IN CUL-DE-SAC

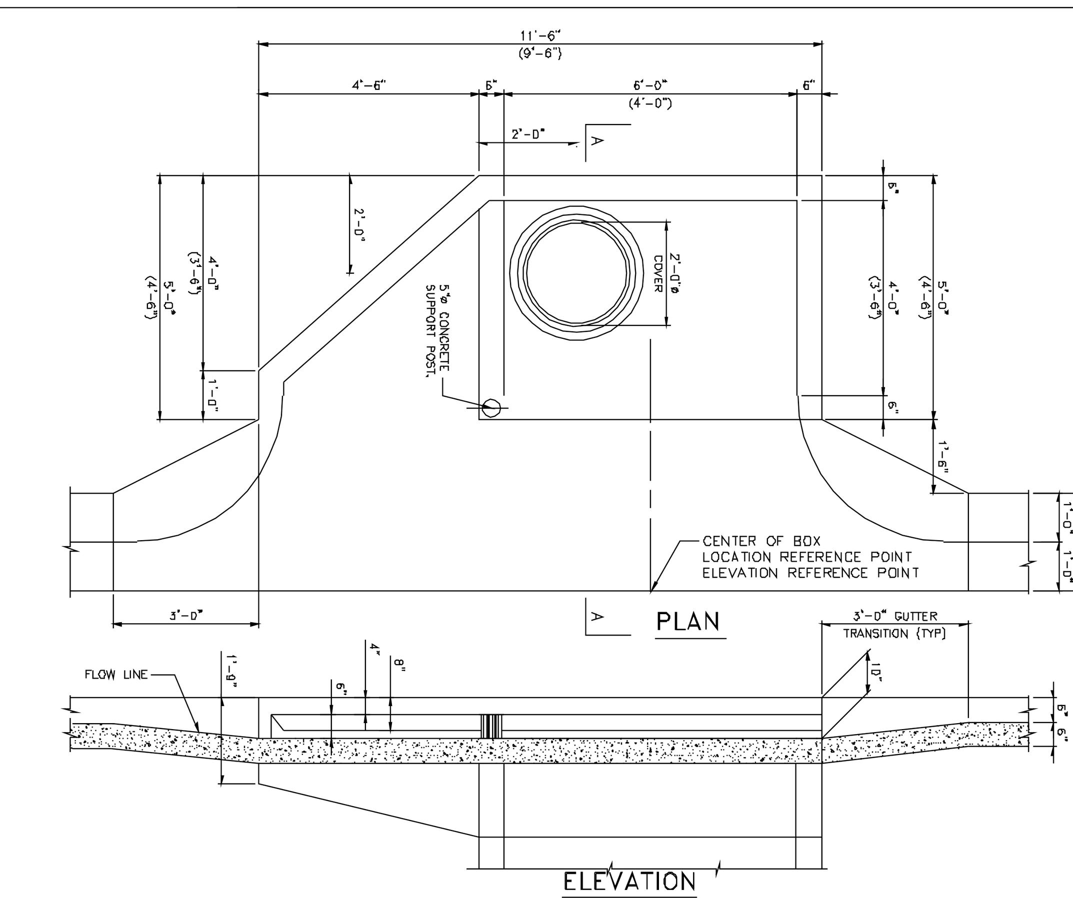

REVISION DATE : 12/08	TRANSPORTATION TECHNICAL MANUAL	Hillsborough County Florida	TYPE II INLET (OFFSET FROM CURB) PLAN AND ELEVATION	DRAWING NO. TD-18 / SHEET NO. 3 OF 14

GENERAL NOTES

1. INLETS MAY BE PLACED ADJACENT TO OR SET BACK FROM MIAMI CURB WITH THE PROPER TRANSITIONS INDICATED IN THE DETAILS.
2. THE FINISHED GRADE AND SLOPE OF THE INLET TOPS ARE TO CONFORM WITH THE FINISHED CROSS SLOPE AND GRADE OF THE PROPOSED SIDEWALK AND/OR BORDER.
3. WHEN THE INLETS ARE TO BE CONSTRUCTED ON A CURVE, REFER TO THE PLANS TO DETERMINE THE RADIUS AND, WHERE NECESSARY, MODIFY THE INLET DETAILS ACCORDINGLY. BEND STEEL WHEN NECESSARY.
4. ALL STEEL IN INLET TOP SHALL HAVE 1 1/2" MINIMUM COVER UNLESS OTHERWISE SHOWN. INLET TOPS SHALL BE EITHER CAST-IN-PLACE OR PRECAST CONCRETE.
5. FOR STRUCTURE BOTTOMS AND SUPPLEMENTAL DETAILS SEE FDOT STANDARD INDEX NO'S. 200 AND 201.
6. ONLY ROUND CONCRETE SUPPORT POSTS WILL BE ACCEPTABLE.
7. INLETS ADJACENT TO MIAMI CURB ARE DESIGNED FOR USE WITH STANDARD CURB AND GUTTER TYPES E AND F, PER FDOT STANDARD INDEX 300. LOCATE INLET OUTSIDE OF PEDESTRIAN CROSSWALKS.
8. CONCRETE SHALL HAVE A MINIMUM 28 DAY COMPRESSIVE STRENGTH, F'C = 4000 PSI.
9. REINFORCING STEEL SHALL BE GRADE 60 DEFORMED BARS, PER ASTM A615.
10. WHEN USING INLETS SET BACK FROM THE MIAMI CURB, THE SIDEWALK SHALL BE LOCATED BEHIND THE BACK OF BOX.

REVISION DATE : 12/08	TRANSPORTATION TECHNICAL MANUAL	Hillsborough County Florida	TYPE I, II + III INLETS GENERAL NOTES	DRAWING NO. TD-18 / SHEET NO. 1 OF 14

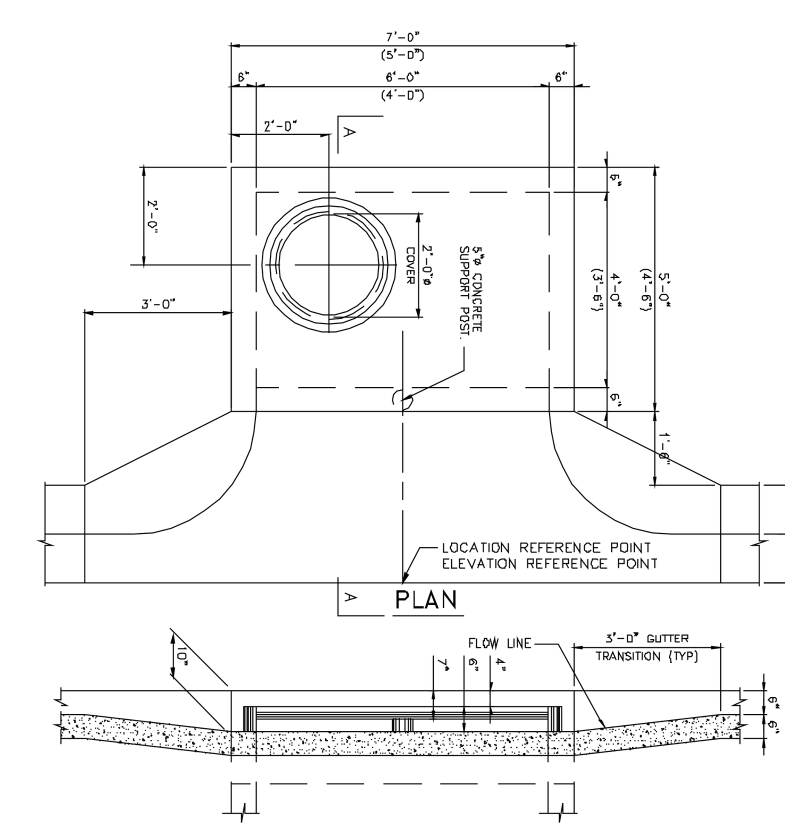

REVISION DATE : 12/08	TRANSPORTATION TECHNICAL MANUAL	Hillsborough County Florida	TYPE I INLET (OFFSET FROM CURB) PLAN AND ELEVATION	DRAWING NO. TD-18 / SHEET NO. 2 OF 14

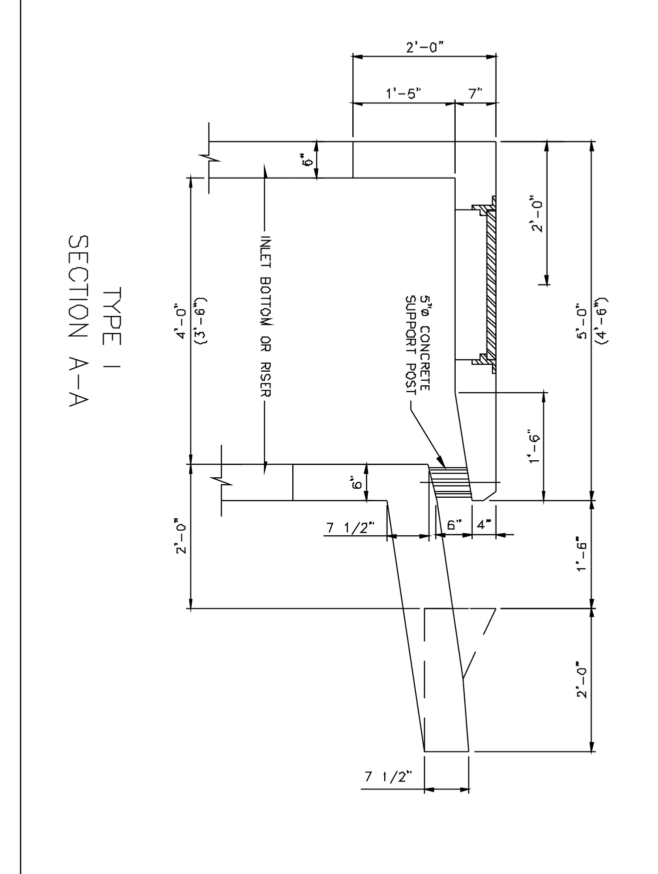

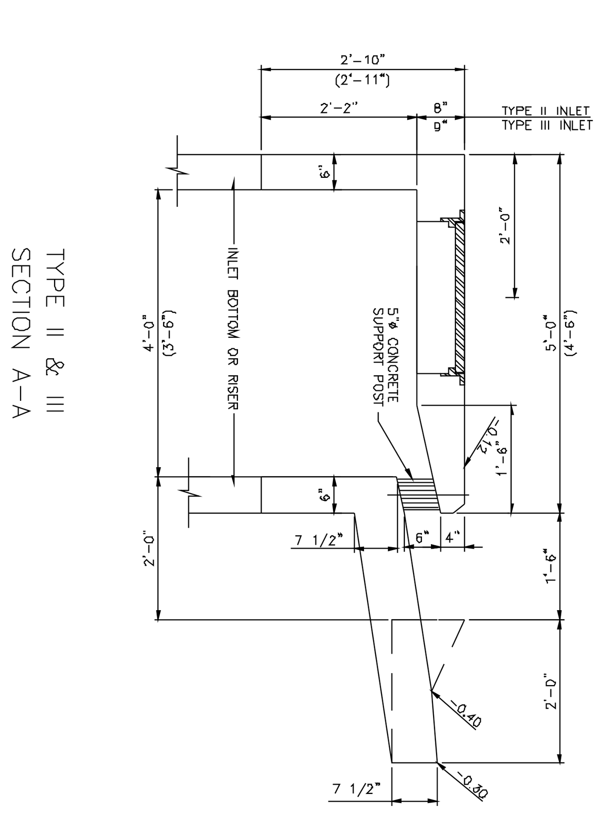

REVISION DATE : 12/08	TRANSPORTATION TECHNICAL MANUAL	Hillsborough County Florida	TYPE I, II + III INLET (OFFSET FROM CURB) SECTIONS AND DETAILS	DRAWING NO. TD-18 / SHEET NO. 5 OF 14

Q:\CIVIL\5163\905\000\Production\Drawings\DET-STM.dwg , February 11, 2015 10:40 AM , King Engineering Associate Inc.
© COPYRIGHT 2014 KING ENGINEERING ASSOCIATES, INC. DRAWINGS AND CONCEPTS MAY NOT BE USED OR REPRODUCED WITHOUT WRITTEN PERMISSION CONSENT IS HEREBY GRANTED SPECIFICALLY TO GOVERNMENTAL AGENCIES TO REPRODUCE THIS DOCUMENT IN COMPLIANCE WITH F.S. CHAPTER 119.

DESIGNED	JLW
DRAWN	JLW
CHECKED	TLT/AGK
Q.C.	LFK

THE SIGNATURE OF THE QUALITY CONTROL OFFICER IN THIS SPACE INDICATES THAT ALL REQUIRED PERMITS HAVE BEEN OBTAINED AND THAT CONSTRUCTION IS AUTHORIZED TO COMMENCE.
MER 2/5/15

King ENGINEERING ASSOCIATES, INC.
4921 Memorial Highway
One Memorial Center, Suite 300
Tampa, Florida 33634
Phone 813 880-8881
Fax 813 880-8882
www.kingengineering.com
Engineering License #2610

THE OAKS AT SHADY CREEK, PHASE 2
FOR
LENNAR HOMES, LLC
4600 WEST CYPRESS ST. SUITE 200
TAMPA, FL. 34683
813-574-5653

STORM SEWER DETAILS

NO.	DATE	DESCRIPTION	APP'D BY

JOB NO. 5163-905-000	SHEET NO.
DATE: 10-28-2014	C10.01
SCALE: AS SHOWN	

HC FINAL SET
FEB. 11, 2015

SPECIFICATION 331002

Exhibit No. W-1F

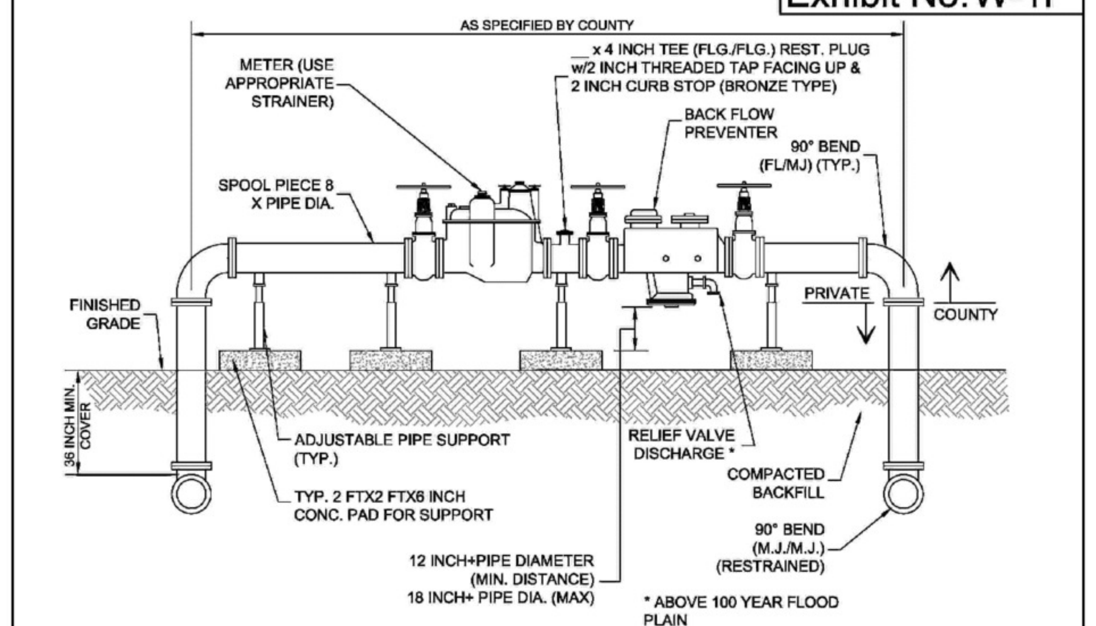

TEMPORARY CONST. METER ASSY.

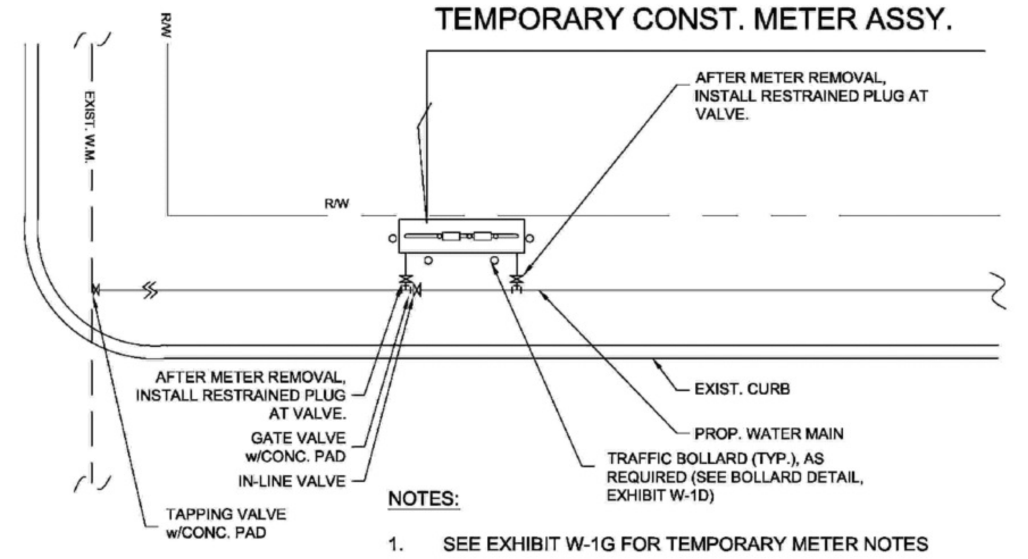

NOTES:

1. SEE EXHIBIT W-1G FOR TEMPORARY METER NOTES

TEMPORARY CONSTRUCTION WATER METER ASSEMBLY FOR RESIDENTIAL OR COMMERCIAL DEVELOPMENT 6" AND LARGER | 10/2013
HILLSBOROUGH COUNTY, FLORIDA | SCALE: N.T.S.

SPECIFICATION 331002

Exhibit No. W-1G

GENERAL NOTES:

1. A MASTER METER ASSEMBLY SHALL BE DIRECTLY ACCESSIBLE BY BOOM TRUCK OFF A COUNTY ROW, OR BY AN INTERIOR ROAD THAT IS NOT BLOCKED BY A WALL OR GATE. THE ACCESS ROAD SHALL BE 12 FT WIDE (MIN.) AND PAVED (CONCRETE OR ASPHALT)
2. ALL ABOVE GROUND PIPES AND FITTINGS SHALL BE CLASS 53 D.I.P. FOR 4 INCH AND LARGER PIPE.
3. CERTIFICATION OF PROPER INSTALLATION AND OPERATION WILL BE REQUIRED FROM A CERTIFIED BACKFLOW PREVENTION TECHNICIAN PRIOR TO THE WATER MAIN ACCEPTANCE BY THE HILLSBOROUGH COUNTY PUBLIC UTILITIES DEPARTMENT.
4. ALL BACKFLOW ASSEMBLIES OR DEVICES MUST HAVE ASSE APPROVAL. IN ADDITION THE BACKFLOW PREVENTION DEVICE ASSEMBLY SHALL BE A REDUCED PRESSURE DEVICE AS LISTED ON THE APPROVED LIST OF THE UNIVERSITY OF SOUTHERN CALIFORNIA FOUNDATION FOR CROSS CONNECTION AND HYDRAULIC RESEARCH.
5. THE PROPERTY OWNER SHALL BE RESPONSIBLE FOR THE PROPER OPERATION, MAINTENANCE, AND TESTING OF THE BACKFLOW PREVENTION DEVICE ASSEMBLY.
6. THE 6 INCH CONCRETE SLAB SHALL BE REINFORCED WITH 6x6-W1.4xW1.4 WELDED WIRE FABRIC AND SHALL BE TYPE I, PORTLAND CEMENT WITH A MINIMUM 28-DAY STRENGTH OF 3000psi.
7. SLAB WIDTH AND LENGTH SHALL VARY WITH ASSEMBLY. THE TOP OF SLAB SHALL BE 2 INCHES ABOVE FINISHED GRADE.
8. THE METER ASSEMBLY & BOLLARDS SHALL BE PAINTED IN ACCORDANCE WITH SPECIFICATION 331001, PART 2.6.
9. IF THE METER ASSEMBLY IS LOCATED WITHIN A TRAFFIC AREA (WITHIN 15 FT OF EOP/BOC), METERS UP TO 2 INCHES SHALL HAVE A MINIMUM OF 4 TRAFFIC BOLLARD PROTECTION POSTS, AND FOR METERS 3 INCHES & LARGER A MINIMUM OF 6 TRAFFIC BOLLARDS ARE REQUIRED.

TEMPORARY METER NOTES:

1. THE IN-LINE VALVE IS TO REMAIN CLOSED UNTIL AFTER THE CONSTRUCTION AND ACCEPTANCE OF THE DEVELOPMENT WATER DISTRIBUTION SYSTEM.
2. THE METER ASSEMBLY IS TO BE REMOVED AFTER FINAL ACCEPTANCE OF THE WATER DISTRIBUTION SYSTEM BY THE HILLSBOROUGH COUNTY HEALTH DEPARTMENT AND THE HILLSBOROUGH COUNTY PLANNING AND GROWTH MANAGEMENT DEPARTMENT.
3. ALL CONSTRUCTION MUST MEET APPLICABLE STATE AND/OR LOCAL ROADWAY/ROADSIDE DESIGN STANDARDS INCLUDING, BUT NOT LIMITED TO, CLEAR ZONE REQUIREMENTS.

NOTES WATER METER ASSEMBLIES RESIDENTIAL OR COMMERCIAL DEVELOPMENT | 10/2013
HILLSBOROUGH COUNTY, FLORIDA | SCALE: N.T.S.

SPECIFICATION 331002

Exhibit No. W-3

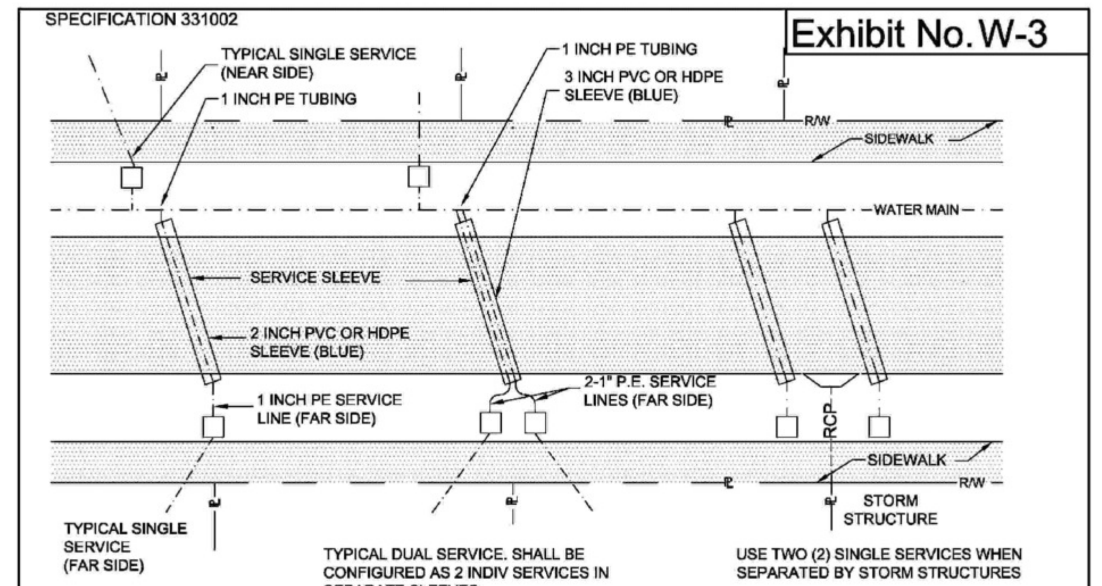

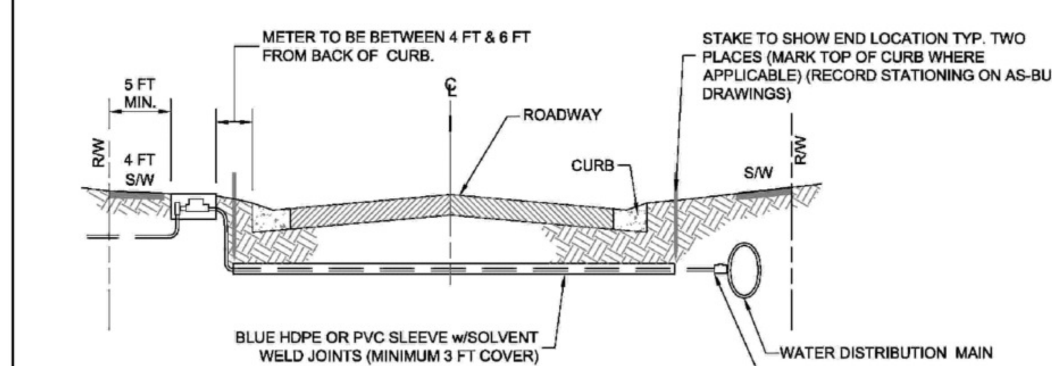

NOTES:

1. SLEEVE SHALL BE EXTENDED 24 INCH PAST ANY PAVED SURFACE WITHIN DEDICATED R/W.
2. EACH SERVICE SHALL TERMINATE AT A CURB STOP(S) WHICH SHALL BE BURIED APPROXIMATELY 6 INCHES BELOW FINAL GRADE AND SHALL BE CLEARLY MARKED WITH A 2 INCH x 2 INCH x 18 INCH STAKE WITH THE TOP PAINTED BLUE AND MARKED WITH THE LOT(S) NUMBER SERVED.
3. STATIONING NOT REQUIRED IF SERVICE IS LOCATED ON LOT LINE.
4. 18 INCH MIN. SPACING BETWEEN SERVICE TAPS ON WATER MAIN SHALL BE MAINTAINED.
5. A NEAR SIDE DUAL SERVICE CONNECTION SERVICING MORE THAN ONE RESIDENCE IS ONLY ALLOWED WHERE RECLAIMED WATER SERVICE IS AVAILABLE.

RESIDENTIAL SERVICE LAYOUT | 10/2013
HILLSBOROUGH COUNTY, FLORIDA | SCALE: N.T.S.

SPECIFICATION 331002

Exhibit No. W-4A

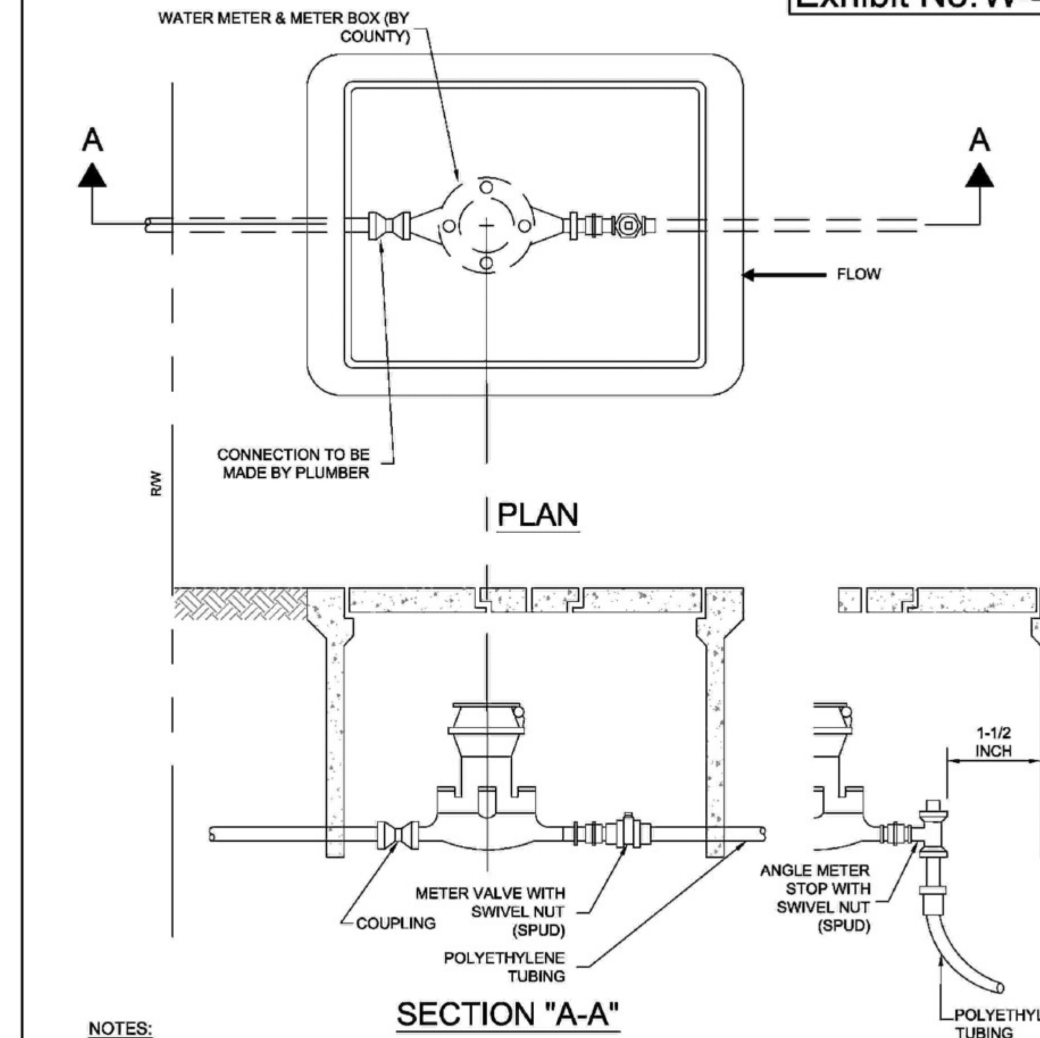

NOTES:

1. NO SERVICE LINE SHALL TERMINATE UNDER A DRIVEWAY.
2. TEMPORARY INDENTIFICATION:EACH SERVICE SHALL TERMINATE AT A METER VALVE WHICH SHALL BE BURIED APPROXIMATELY 6 INCHES BELOW FINAL GRADE AND SHALL BE CLEARLY MARKED WITH A 2 INCH x 2 INCH x 18 INCH STAKE WITH THE TOP PAINTED BLUE AND MARKED WITH THE LOT NUMBER SERVED.

RESIDENTIAL SINGLE METER SERVICE (NEAR SIDE & FAR SIDE) | 10/2013
HILLSBOROUGH COUNTY, FLORIDA | SCALE: N.T.S.

SPECIFICATION 331002

Exhibit No. W-4B

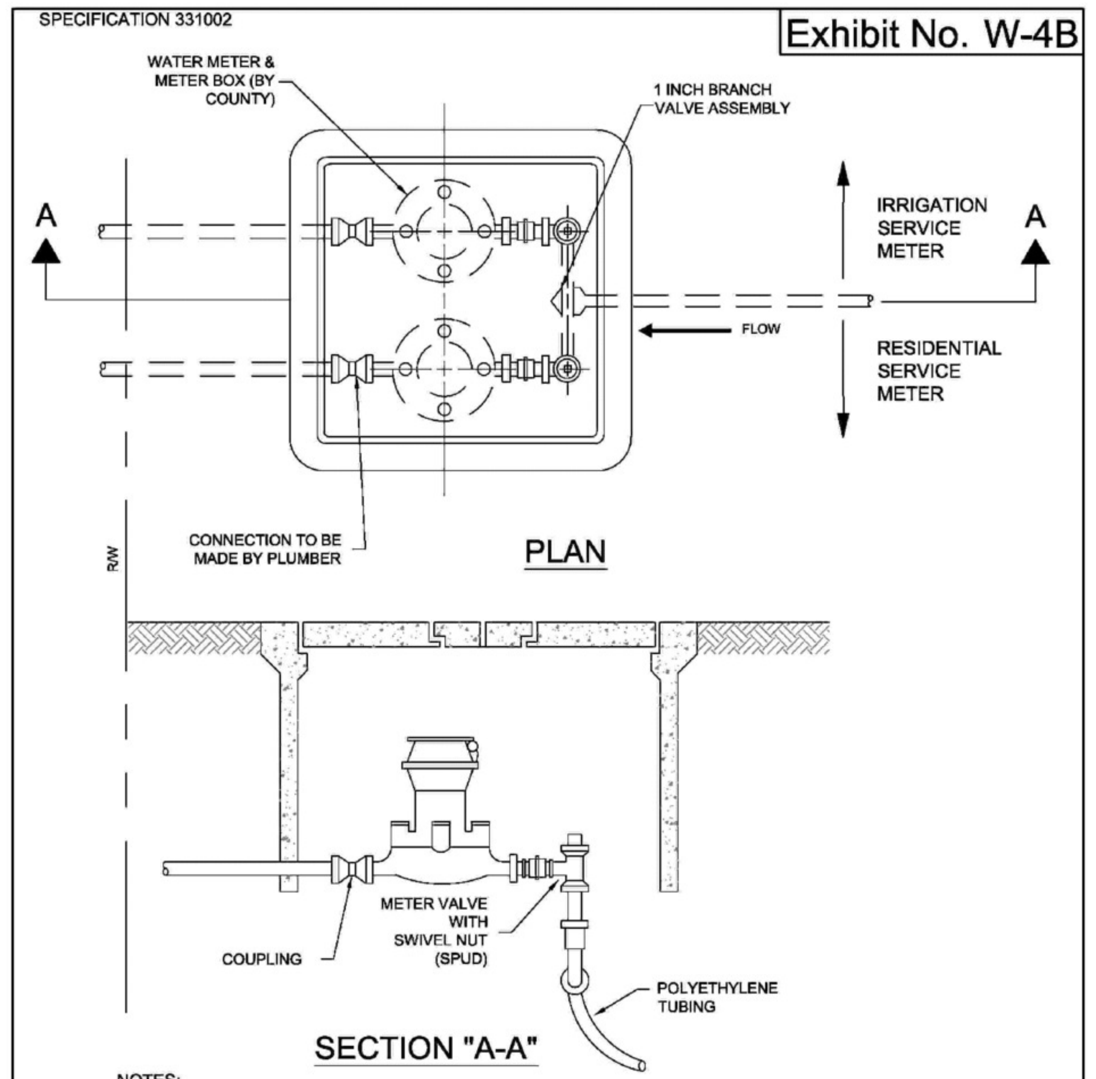

NOTES:

1. NO SERVICE LINE SHALL TERMINATE UNDER A DRIVEWAY.
2. TEMPORARY INDENTIFICATION: EACH SERVICE SHALL TERMINATE AT A METER VALVE WHICH SHALL BE BURIED APPROXIMATELY 6 INCHES BELOW FINAL GRADE AND SHALL BE CLEARLY MARKED WITH A 2 INCH x 2 INCH x 18 INCH STAKE WITH THE TOP PAINTED BLUE AND MARKED WITH THE LOT NUMBER SERVED.

RESIDENTIAL DUAL METER SINGLE LOT SERVICE | 10/2013
HILLSBOROUGH COUNTY, FLORIDA | SCALE: N.T.S.

SPECIFICATION 331002

Exhibit No. W-4C

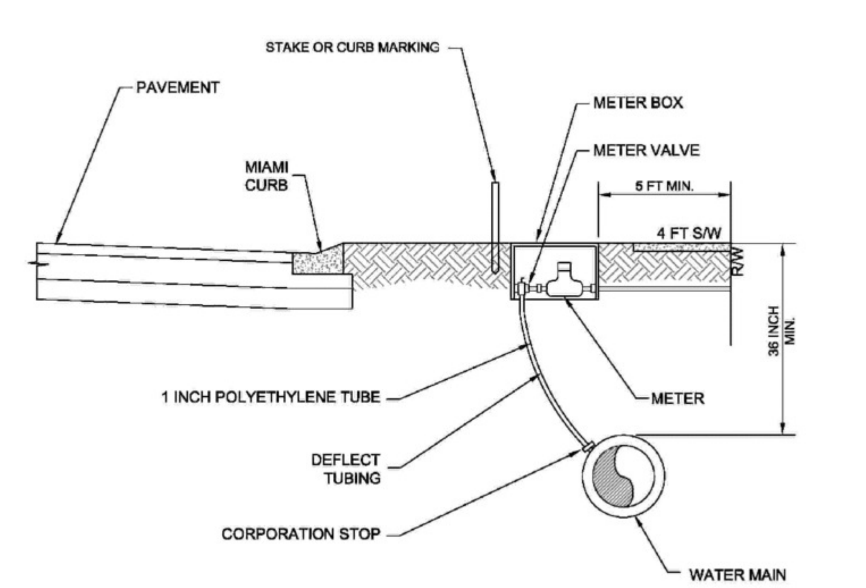

NOTE:

1. CAST BRONZE COMPRESSION FITTING CONNECTIONS SHALL BE USED & INSTALLED IN ACCORDANCE WITH COUNTY SPECIFICATIONS.
2. METER AND METER BOX SUPPLIED BY HILLSBOROUGH COUNTY.
3. USE 1 INCH DIAMETER HDPE FOR SINGLE SERVICE.
4. REDUCE HDPE AT THE METER WITH A BRASS REDUCER.
5. NO SERVICE LINE SHALL TERMINATE UNDER A DRIVEWAY.
6. EACH SERVICE SHALL TERMINATE AT A METER VALVE WHICH SHALL BE BURIED APPROXIMATELY 6 INCHES BELOW FINAL GRADE AND SHALL BE CLEARLY MARKED WITH A 2 INCH x 2 INCH x 18 INCH STAKE WITH THE TOP PAINTED BLUE AND MARKED WITH THE LOT NUMBER SERVED.

RESIDENTIAL METER SERVICE INSTALLATION (METER OVER MAIN) | 10/2013
HILLSBOROUGH COUNTY, FLORIDA | SCALE: N.T.S.

SPECIFICATION 331002

Exhibit No. W-4E

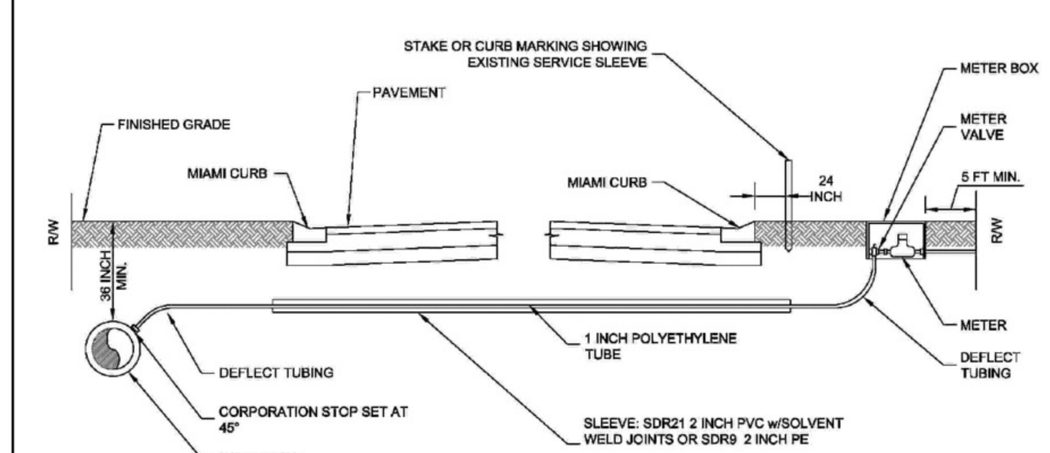

NOTE:

1. CAST BRONZE COMPRESSION FITTING CONNECTIONS SHALL BE USED & INSTALLED IN ACCORDANCE WITH COUNTY SPECIFICATIONS.
2. METER AND METER BOX SUPPLIED BY HILLSBOROUGH COUNTY.
3. USE 1 INCH DIAMETER HDPE FOR SINGLE SERVICE.
4. REDUCE HDPE AT THE METER WITH A BRASS REDUCER.
5. NO SERVICE LINE SHALL TERMINATE UNDER A DRIVEWAY.
6. EACH SERVICE SHALL TERMINATE AT A METER VALVE WHICH SHALL BE BURIED APPROXIMATELY 6 INCHES BELOW FINAL GRADE AND SHALL BE CLEARLY MARKED WITH A 2 INCH x 2 INCH x 18 INCH STAKE WITH THE TOP PAINTED BLUE AND MARKED WITH THE LOT NUMBER SERVED.

RESIDENTIAL METER SERVICE INSTALLATION (FAR SIDE) | 10/2013
HILLSBOROUGH COUNTY, FLORIDA | SCALE: N.T.S.

SPECIFICATION 331002

Exhibit No. W-4F

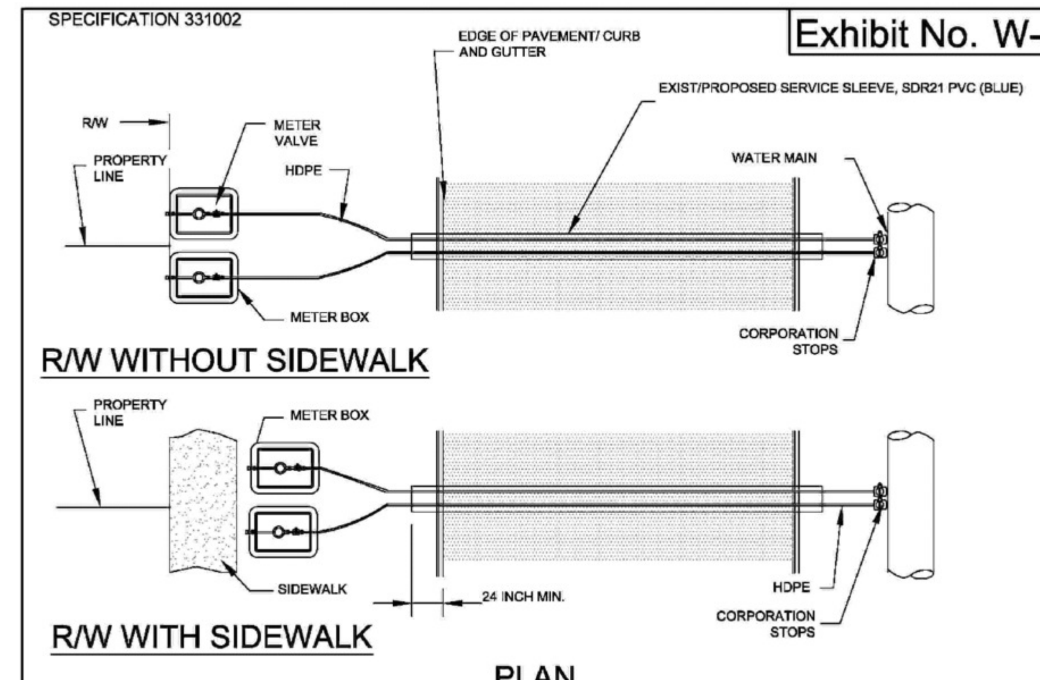

NOTE:
DO NOT INSTALL METER WITHIN SIDEWALK. INSTALL METER WITHIN R/W IN FRONT OF SIDEWALK OR AS DIRECTED BY THE ENGINEER.

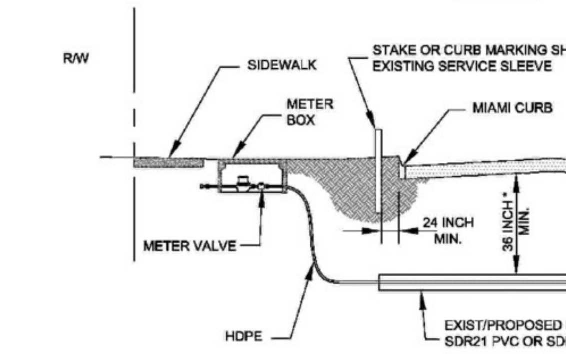

* 36 INCH MIN. OR GREATER IF REQUIRED BY APPROPRIATE PERMITTING AGENCY

PROFILE

METER SIZE	SERVICE LINE SIZE (inches)	CASING SIZE (inches)
3/4 & 1 Inch Dual Service	1	3 **

** FOR SERVICES > 50 FT (E.G., CUL DE SAC CROSSINGS), A 4 INCH DIAMETER CASING IS REQUIRED

RESIDENTIAL DUAL LOT METERED SERVICE (FAR SIDE) | 10/2013
HILLSBOROUGH COUNTY, FLORIDA | SCALE: N.T.S.

Q:\CIVIL\5163\905\000\Production\Drawings\DET-WAT.dwg , February 11, 2015 10:40 AM , King Engineering Associate Inc.

© COPYRIGHT 2014 KING ENGINEERING ASSOCIATES, INC. DRAWINGS AND CONCEPTS MAY NOT BE USED OR REPRODUCED WITHOUT WRITTEN PERMISSION CONSENT IS HEREBY GRANTED SPECIFICALLY TO GOVERNMENTAL AGENCIES TO REPRODUCE THIS DOCUMENT IN COMPLIANCE WITH F.S. CHAPTER 119.

DESIGNED JLW
DRAWN JLW
CHECKED TLT/AGK
Q.C. LFK

THE SIGNATURE OF THE QUALITY CONTROL OFFICER IN THIS SPACE INDICATES THAT ALL REQUIRED PERMITS HAVE BEEN OBTAINED AND THAT CONSTRUCTION IS AUTHORIZED TO COMMENCE.
MER 2/5/15

King
ENGINEERING ASSOCIATES, INC.
4921 Memorial Highway
One Memorial Center, Suite 300
Tampa, Florida 33634
Phone 813 880-8881
Fax 813 880-8882
www.kingengineering.com
Engineering License #2610

THE OAKS AT SHADY CREEK, PHASE 2

FOR

LENNAR HOMES, LLC
4600 WEST CYPRESS ST. SUITE 200
TAMPA, FL. 34683
813-574-5653

WATER DISTRIBUTION DETAILS

NO.	DATE	DESCRIPTION	APP'D BY

JOB NO. 5163-905-000
DATE: 10-28-2014
SCALE: AS SHOWN
SHEET NO. C11.01
HC FINAL SET FEB. 11, 2015

SPECIFICATION 331002

Exhibit No. W-5B

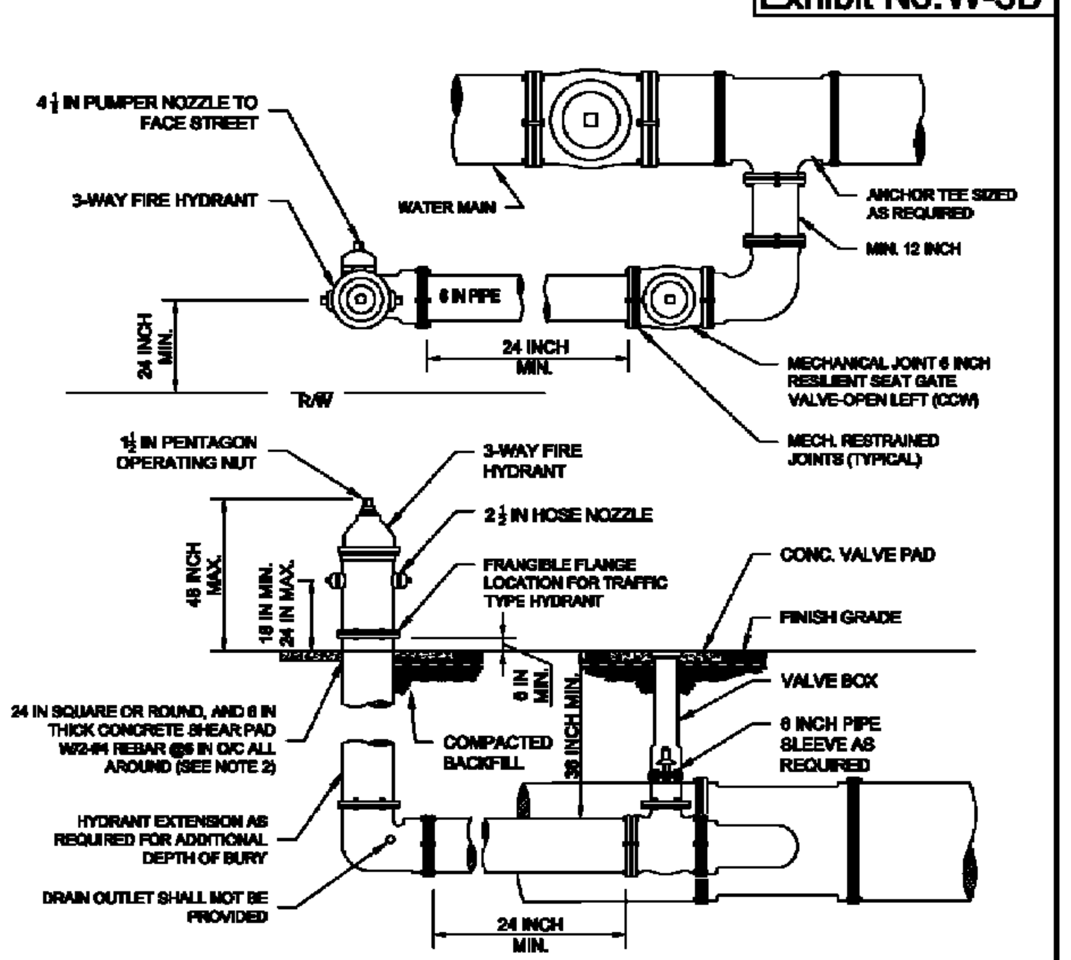

NOTES:

1. SHEAR PAD REQUIRED FOR ALL HYDRANTS ALONG ARTERIAL AND COLLECTOR ROADWAYS. 18 INCH MIN CLEARANCE TO BE MAINTAINED BETWEEN PAD AND HYDRANT NOZZLES.
2. CLEARANCE BETWEEN BOTTOM OF FLANGE AND TOP OF SHEAR PAD SHALL BE 6 INCH ± 0 INCH TOLERANCE.
3. FIRE HYDRANTS SHALL BE INSTALLED BETWEEN BACK OF CURB AND FACE OF SIDEWALK EXCEPT WHERE CONDITIONS AND/OR REGULATIONS PROHIBIT.
4. PUMPER NOZZLE TO FACE STREET.
5. PER NFPA 1, CLEARANCES OF SEVEN AND ONE HALF FEET IN FRONT OF AND TO THE SIDES OF THE FIRE HYDRANT, AND FOUR FEET TO THE REAR OF THE HYDRANT MUST BE MAINTAINED.

FIRE HYDRANT FOR LIMITED SPACE (RESTRAINED) | 10/2013
HILLSBOROUGH COUNTY, FLORIDA | SCALE: N.T.S.

SPECIFICATION 331002

Exhibit No. W-6A

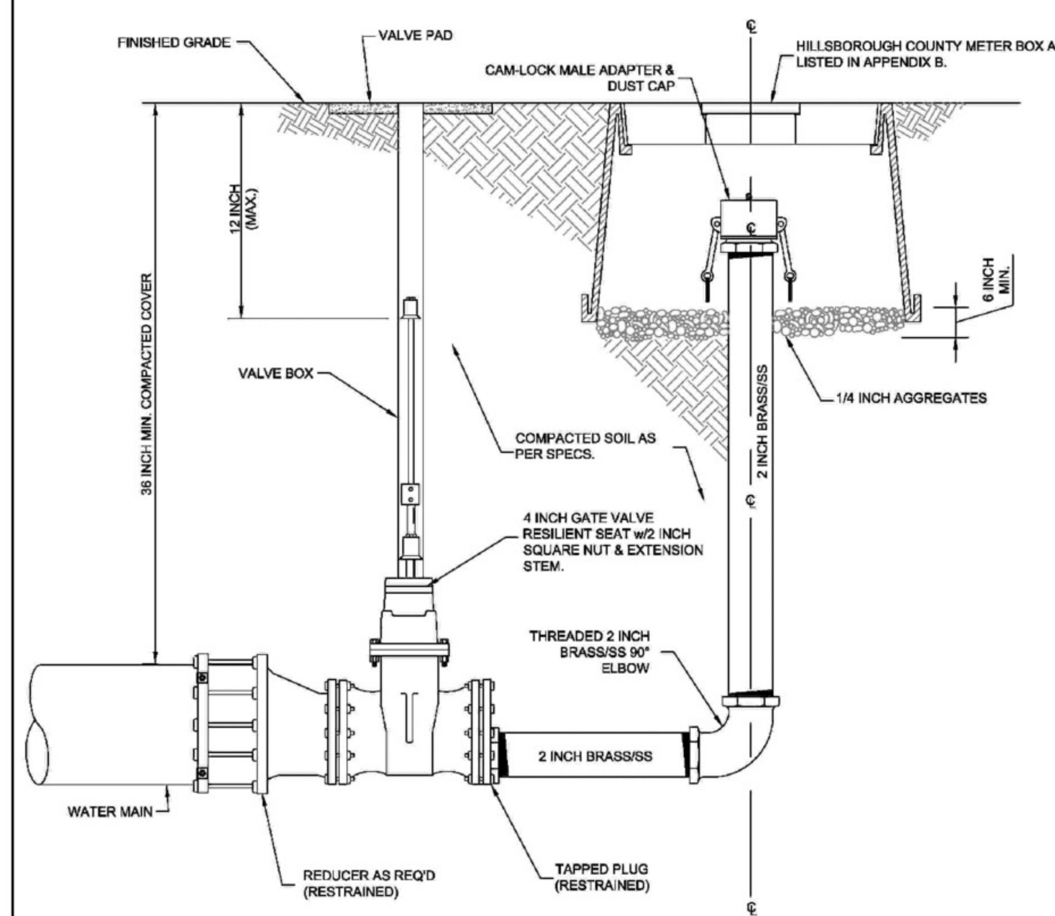

NOTES:

1. ALL BRASS/STAINLESS PIPE AND FITTINGS SHALL BE THREADED SCH. 40.
2. CAM-LOCK MALE ADAPTER & DUST CAP SHALL BE ALUMINUM/THREADED.
3. ACTUAL LENGTH OF BRASS/STAINLESS PIPELINE TO BE DETERMINED IN THE FIELD.
4. DEFLECT OR INSTALL FITTINGS AS REQUIRED TO MAINTAIN COVER AND TO SET BLOW-OFF ASSEMBLY PLUMB.
5. EXTENSION OF VALVE BOX SHALL BE SET SO AS TO RESERVE 1/2 OF THE ADJUSTMENT LENGTH FOR FUTURE USE.

BLOWOFF ASSEMBLY | 10/2013
HILLSBOROUGH COUNTY, FLORIDA | SCALE: N.T.S.

SPECIFICATION 331002

Exhibit No. W-7A

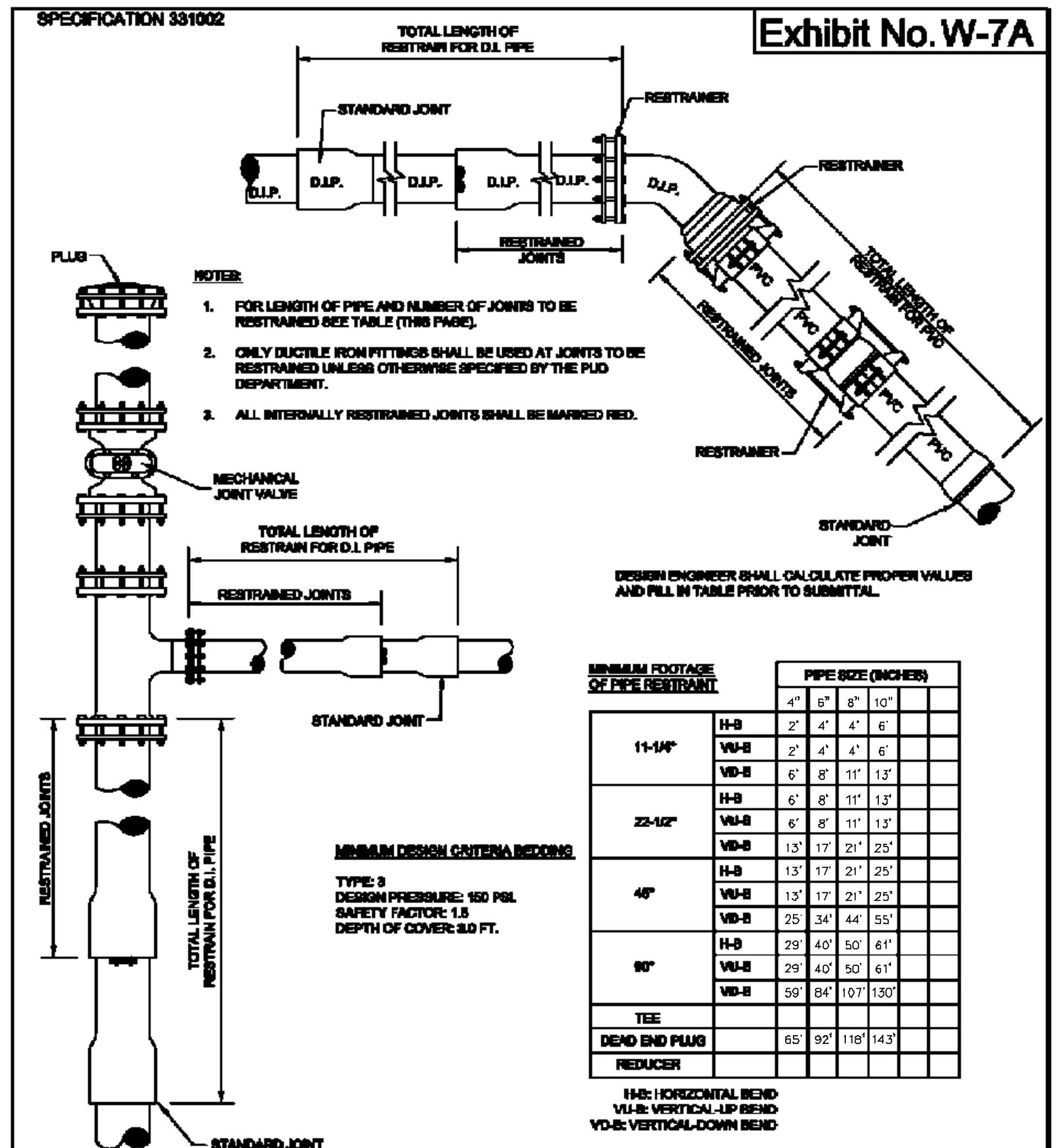

NOTES:

1. FOR LENGTH OF PIPE AND NUMBER OF JOINTS TO BE RESTRAINED SEE TABLE (THIS PAGE).
2. ONLY DUCTILE IRON FITTINGS SHALL BE USED AT JOINTS TO BE RESTRAINED UNLESS OTHERWISE SPECIFIED BY THE PUD DEPARTMENT.
3. ALL INTERNALLY RESTRAINED JOINTS SHALL BE MARKED RED.

DESIGN ENGINEER SHALL CALCULATE PROPER VALUES AND FILL IN TABLE PRIOR TO SUBMITTAL.

MINIMUM DESIGN CRITERIA BEDDING

TYPE: 3
DESIGN PRESSURE: 150 PSI.
SAFETY FACTOR: 1.5
DEPTH OF COVER: 3.0 FT.

MINIMUM FOOTAGE OF PIPE RESTRAINT		PIPE SIZE (INCHES)					
		4"	6"	8"	10"		
11-1/4°	H-B	2'	4'	4'	6'		
	VU-B	2'	4'	4'	6'		
	VD-B	6'	8'	11'	13'		
22-1/2°	H-B	6'	8'	11'	13'		
	VU-B	6'	8'	11'	13'		
	VD-B	13'	17'	21'	25'		
45°	H-B	13'	17'	21'	25'		
	VU-B	13'	17'	21'	25'		
	VD-B	25'	34'	44'	55'		
90°	H-B	29'	40'	50'	61'		
	VU-B	29'	40'	50'	61'		
	VD-B	59'	84'	107'	130'		
TEE							
DEAD END PLUG		65'	92'	118'	143'		
REDUCER							

H-B: HORIZONTAL BEND
VU-B: VERTICAL-UP BEND
VD-B: VERTICAL-DOWN BEND

RESTRAINED JOINT-STANDARD | 10/2013
HILLSBOROUGH COUNTY, FLORIDA | SCALE: N.T.S.

SPECIFICATION 331002

Exhibit No. W-8

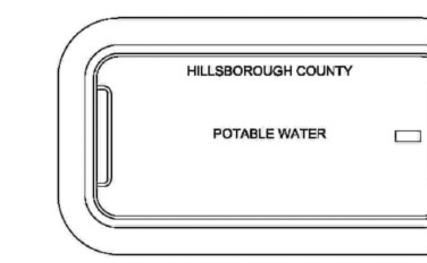

PLAN VIEW

NOTE:

1. ALL LETTERING SHALL BE CAPITALIZED AND AT LEAST ONE INCH IN HEIGHT.
2. REMAINDER OF OPEN SURFACE SHALL BE CROSS HATCHED TO REDUCE SLIPPING ACCIDENTS.
3. COLOR OF BOX AND LID SHALL BE BLACK.
4. A METAL REINFORCED PICK HOLE SHALL BE CENTERED ON THE LIFTING SIDE OF THE LID.
5. THE OPTION OF HAVING LOCKING TABS TO PREVENT "FLOATING" SHALL BE BY REQUEST ONLY.
6. METER BOXES ARE TRAFFIC RATED (H-20).

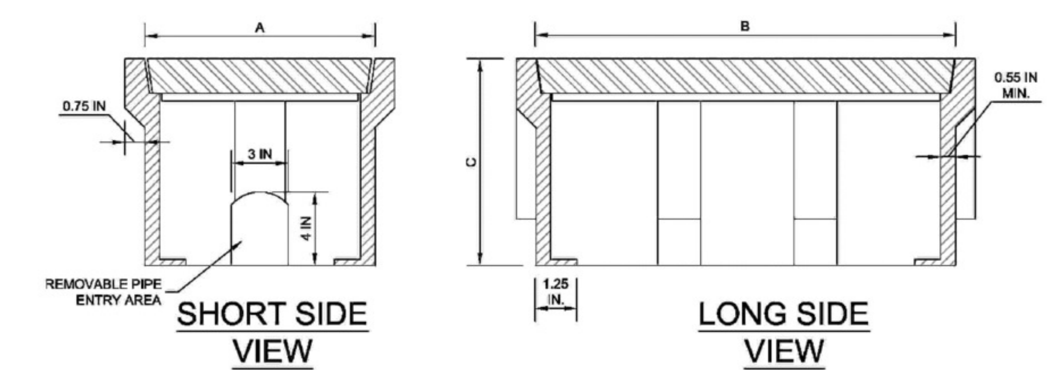

SHORT SIDE VIEW

LONG SIDE VIEW

DIMENSION	SINGLE	DUAL
A	11-1/8 INCHES	14-5/8 INCHES
B	18 INCHES	16-5/8 INCHES
C	12 INCHES	12 INCHES

ALL DIMENSIONS ± 1/8 INCH

POTABLE WATER METER BOX | 10/2013
HILLSBOROUGH COUNTY, FLORIDA | SCALE: N.T.S.

SPECIFICATION 331002

Exhibit No. W-10A

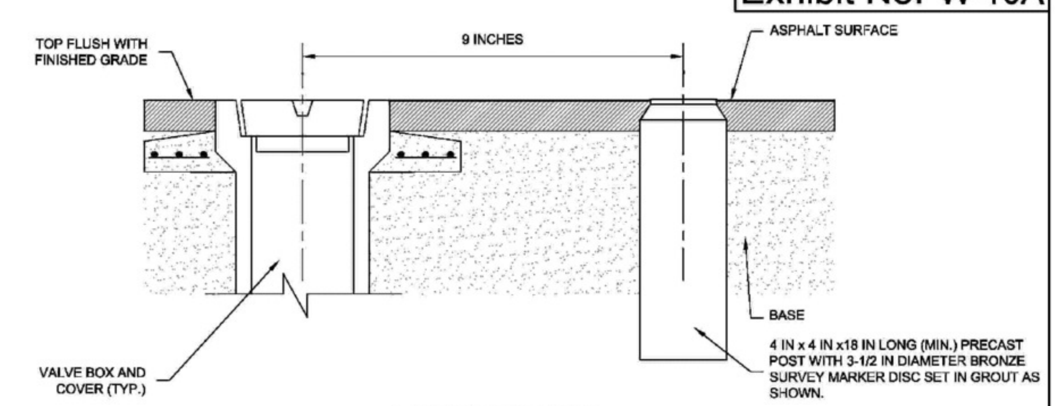

EXAMPLE "A"

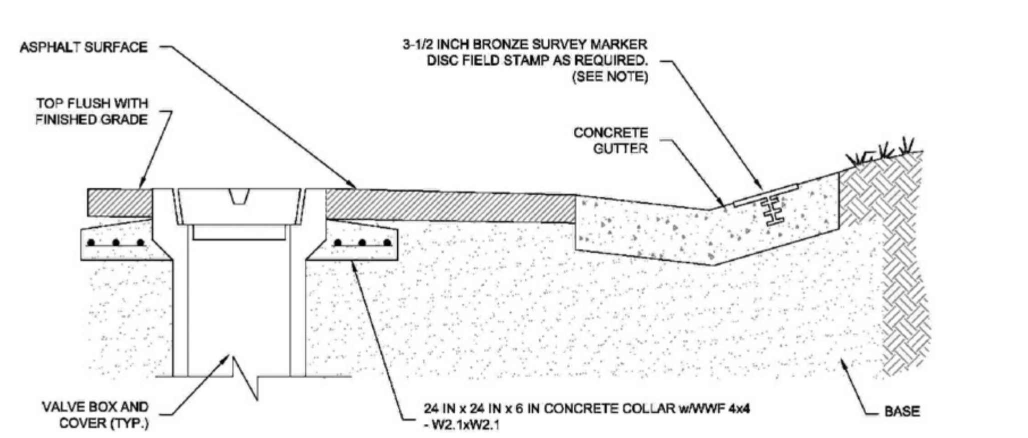

EXAMPLE "B"

NOTE:
BRONZE IDENTIFICATION DISC SHALL BE REQUIRED FOR ALL VALVES.

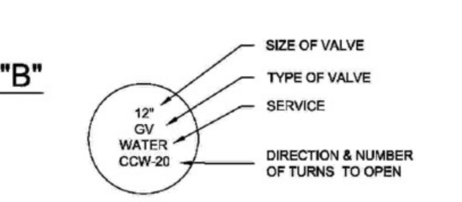

MARKER DISC DETAIL

VALVE BOX & MARKER INSTALLATION FOR PAVED AREAS | 10/2013
HILLSBOROUGH COUNTY, FLORIDA | SCALE: N.T.S.

SPECIFICATION 331002

Exhibit No. W-10B

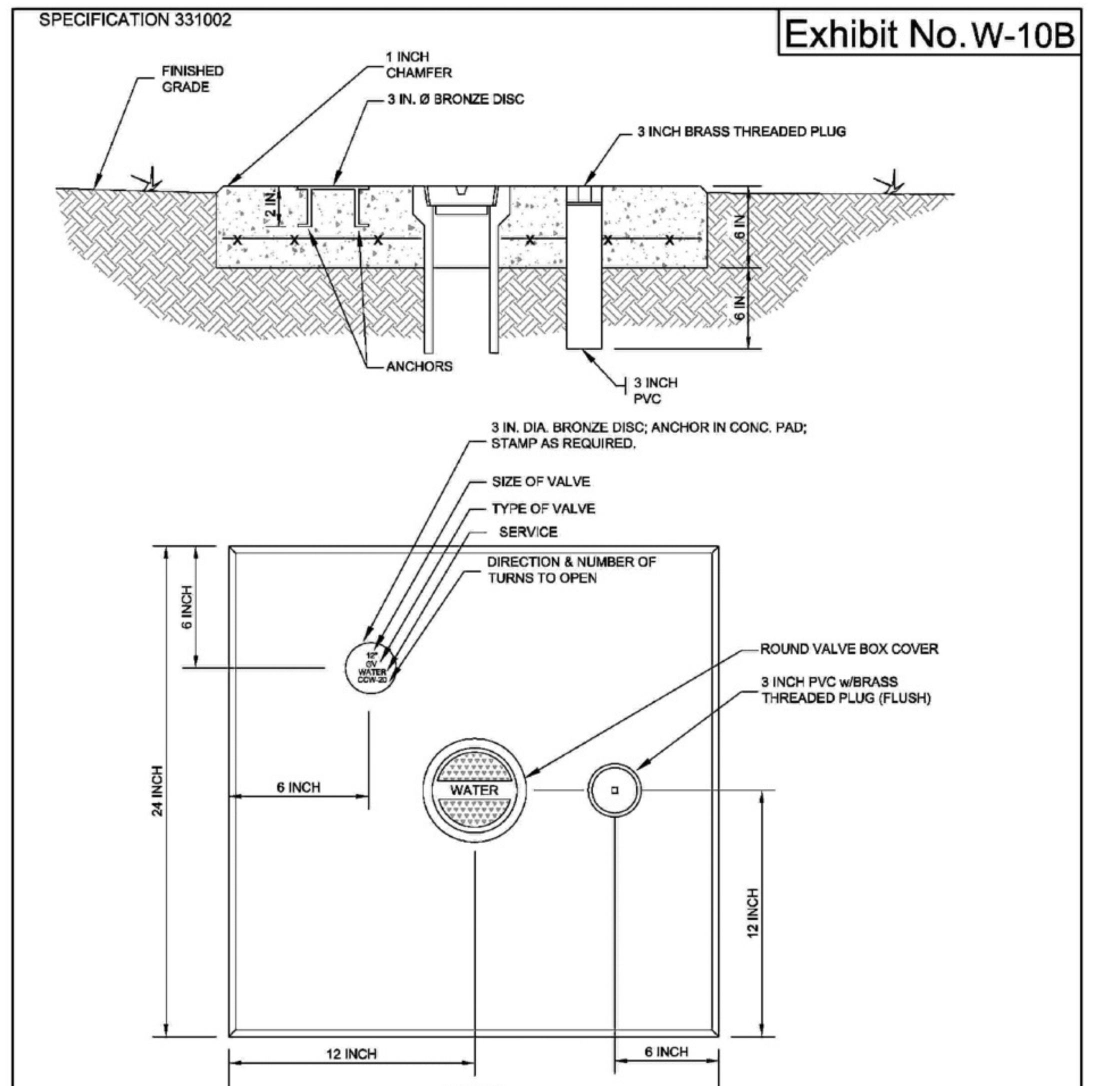

NOTES:

1. CONCRETE TO BE TYPE I GENERAL PORTLAND CEMENT WITH 3/4 IN. TOP SIZE AGGREGATE AND SHALL DEVELOP A 28-DAY STRENGTH OF 3000 psi
2. REINFORCING STEEL SHALL BE WELDED WIRE FABRIC 6x6 - W1.4 x W1.4
3. CONCRETE VALVE PAD SHALL BE POURED IN PLACE AND SHALL BE SET 1/2 IN. ABOVE FINISHED GRADE

CONCRETE VALVE PAD (FOR UNPAVED AREAS) | 10/2013
HILLSBOROUGH COUNTY, FLORIDA | SCALE: N.T.S.

SPECIFICATION 331002

Exhibit No. W-13A

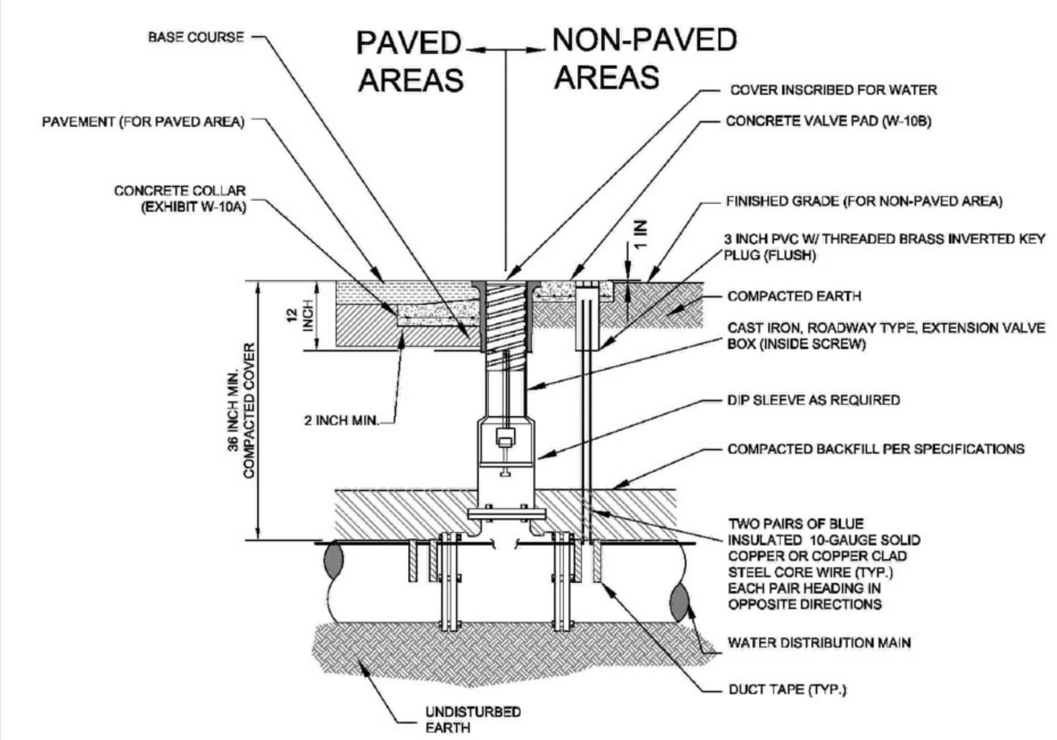

NOTES:

1. EXTENSION ON VALVE BOX SHALL BE SET SO AS TO RESERVE 1/2 OF THE ADJUSTMENT LENGTH FOR FUTURE USE.
2. OPERATING NUT SHALL BE SO AS TO BE WITHIN 12 INCHES OF GRADE. EXTENSION TO BE PROVIDED AS REQUIRED.
3. ALL NON-METALIC PIPE SHALL REQUIRE TWO INSULATED 10 GAUGE SOLID COPPER OR COPPER CLAD STEEL CORE LOCATING WIRES TAPED WITH 2 INCH WIDE DUCT TAPE AT THE 10:00 AND 2:00 POSITION ON THE PIPE AT EVERY JOINT AND 4 TO 5 FEET SPACING. WIRE FOR DIRECTIONAL DRILL APPLICATIONS SHALL BE COPPER CLAD "HARD DRAWN" STEEL CORE WITH A MINIMUM BREAKING STRENGTH OF 1000 PSI.
4. LOCATING WIRES TO TERMINATE 4 INCHES ABOVE CONCRETE VALVE PAD AND FOLDED BACK INSIDE 3 INCH PVC ACCESS PIPE AND PLUGGED.
5. LOCATING WIRES SHALL BE CAPABLE OF DETECTION BY A CABLE LOCATOR AND PASS A FIELD CONDUCTIVITY TEST THAT IS WITNESSED BY THE COUNTY FROM END TO END OF WIRES.
6. SPLICES SHALL BE CAPABLE OF COMPLETE SUBMERSION.
7. NO MORE THAN ONE SPLICE BETWEEN VALVES IS ALLOWED.

VALVE AND TRACER WIRE PAVED OR NON-PAVED AREAS | 10/2013
HILLSBOROUGH COUNTY, FLORIDA | SCALE: N.T.S.

SPECIFICATION 331002

Exhibit No. W-15

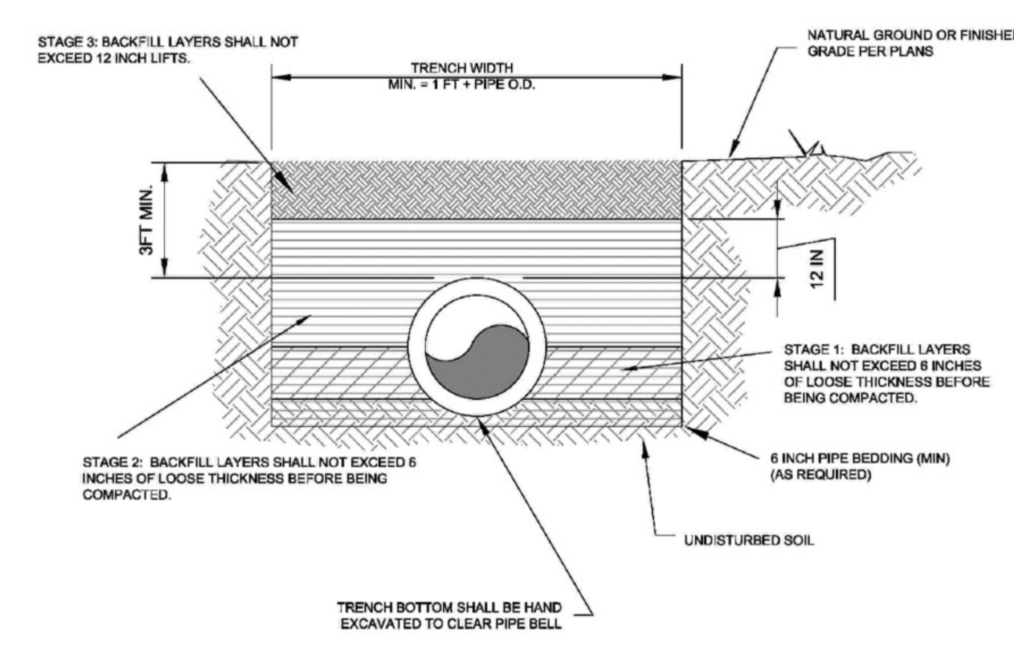

NOTES:

1. TESTING: SEE SPECIFICATION 331001, PART 4.12 FOR TESTING REQUIREMENTS.
2. BEDDING: 6 INCHES BEDDING (MIN) AS REQUIRED. IN THE EVENT UNSUITABLE OR UNSTABLE SOIL IS ENCOUNTERED, REMOVE IT AND REPLACE WITH MATERIAL MEETING AASHTO SOIL CLASSIFICATION A-1, A-2, OR A-3. SEE SPECIFICATION 331001 PART 4.4.
3. STAGE 1: ADEQUATE COMPACTED FILL SHALL BE PLACED ABOVE THE BEDDING MATERIAL AND BENEATH THE HAUNCHES OF THE PIPE. BACKFILL LAYERS SHALL NOT EXCEED 6 INCHES OF LOOSE THICKNESS BEFORE BEING COMPACTED.
4. STAGE 2: BACKFILL LAYERS SHALL NOT EXCEED 6 INCHES OF LOOSE THICKNESS BEFORE BEING COMPACTED. COMPACTION SHALL BE 98% OF THE MAXIMUM DENSITY (AASHTO T-180/ASTM D1557) TO A POINT 1 FT ABOVE THE PIPE (OR AS STATED IN THE SPECIFICATION).
5. STAGE 3: BACKFILL LAYERS SHALL NOT EXCEED 12-INCH LIFTS. COMPACTION SHALL BE 98% OF THE MAXIMUM DENSITY (AASHTO T-180/ASTM D1557) OR AS STATED IN THE SPECIFICATION

TRENCH DETAIL BACKFILL & COMPACTION | 10/2013
HILLSBOROUGH COUNTY, FLORIDA | SCALE: N.T.S.

Q:\CIVIL\5163\905\000\Production\Drawings\DET-WAT.dwg , February 11, 2015 10:40 AM , King Engineering Associate Inc.

© COPYRIGHT 2014 KING ENGINEERING ASSOCIATES, INC. DRAWINGS AND CONCEPTS MAY NOT BE USED OR REPRODUCED WITHOUT WRITTEN PERMISSION CONSENT IS HEREBY GRANTED SPECIFICALLY TO GOVERNMENTAL AGENCIES TO REPRODUCE THIS DOCUMENT IN COMPLIANCE WITH F.S. CHAPTER 119.

DESIGNED: JLW
DRAWN: JLW
CHECKED: TLT/AGK
Q.C.: LFK

THE SIGNATURE OF THE QUALITY CONTROL OFFICER IN THIS SPACE INDICATES THAT ALL REQUIRED PERMITS HAVE BEEN OBTAINED AND THAT CONSTRUCTION IS AUTHORIZED TO COMMENCE.
MER 2/5/15

King ENGINEERING ASSOCIATES, INC.
4921 Memorial Highway
One Memorial Center, Suite 300
Tampa, Florida 33634
Phone 813 880-8881
Fax 813 880-8882
www.kingengineering.com
Engineering License #2610

THE OAKS AT SHADY CREEK, PHASE 2
FOR
LENNAR HOMES, LLC
4600 WEST CYPRESS ST. SUITE 200
TAMPA, FL. 34683
813-574-5653

WATER DISTRIBUTION DETAILS

NO.	DATE	DESCRIPTION	APP'D BY

JOB NO.: 5163-905-000
DATE: 10-28-2014
SCALE: AS SHOWN
SHEET NO.: C11.02
HC FINAL SET FEB. 11, 2015

SPECIFICATION 333006

Exhibit No. S-1

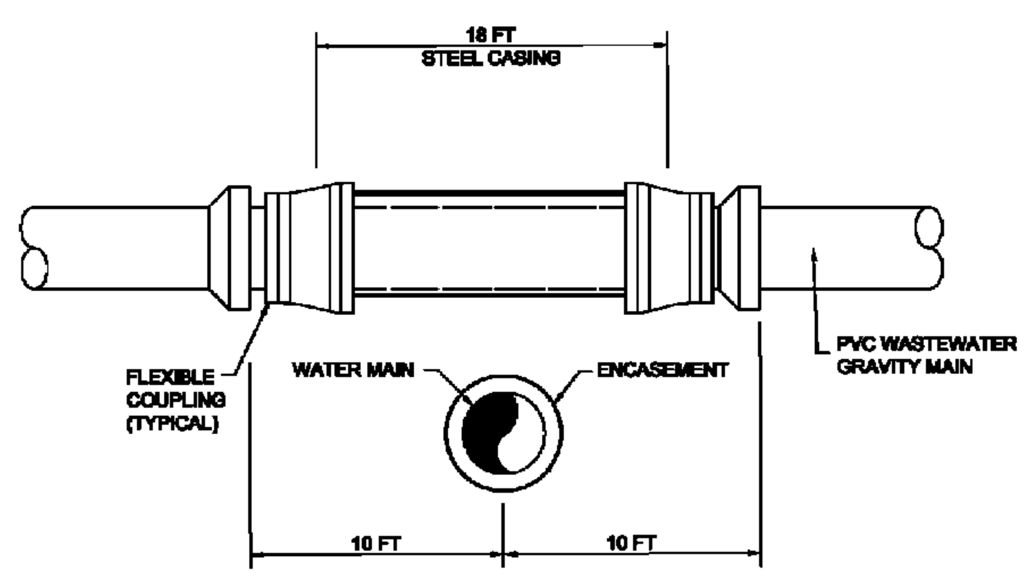

NOTES:
1. WHERE WATER AND SEWER CROSS WITH LESS THAN 18 INCHES OF VERTICAL CLEARANCE, THE GRAVITY SEWER SHALL CONSIST OF 18 FT OF STEEL ENCASED PVC PIPE CENTERED ON THE POINT OF THE CROSSING AS DETAILED ABOVE.
2. WHERE WATER MAIN CROSSES BELOW SEWER MAIN, BOTH THE GRAVITY AND THE WATER MAIN MUST BE ENCASED.

GRAVITY MAIN AND WATER MAIN INTERSECTION DETAILS	10/2013
HILLSBOROUGH COUNTY, FLORIDA	SCALE: N.T.S.

SPECIFICATION 333006

Exhibit No. S-4A

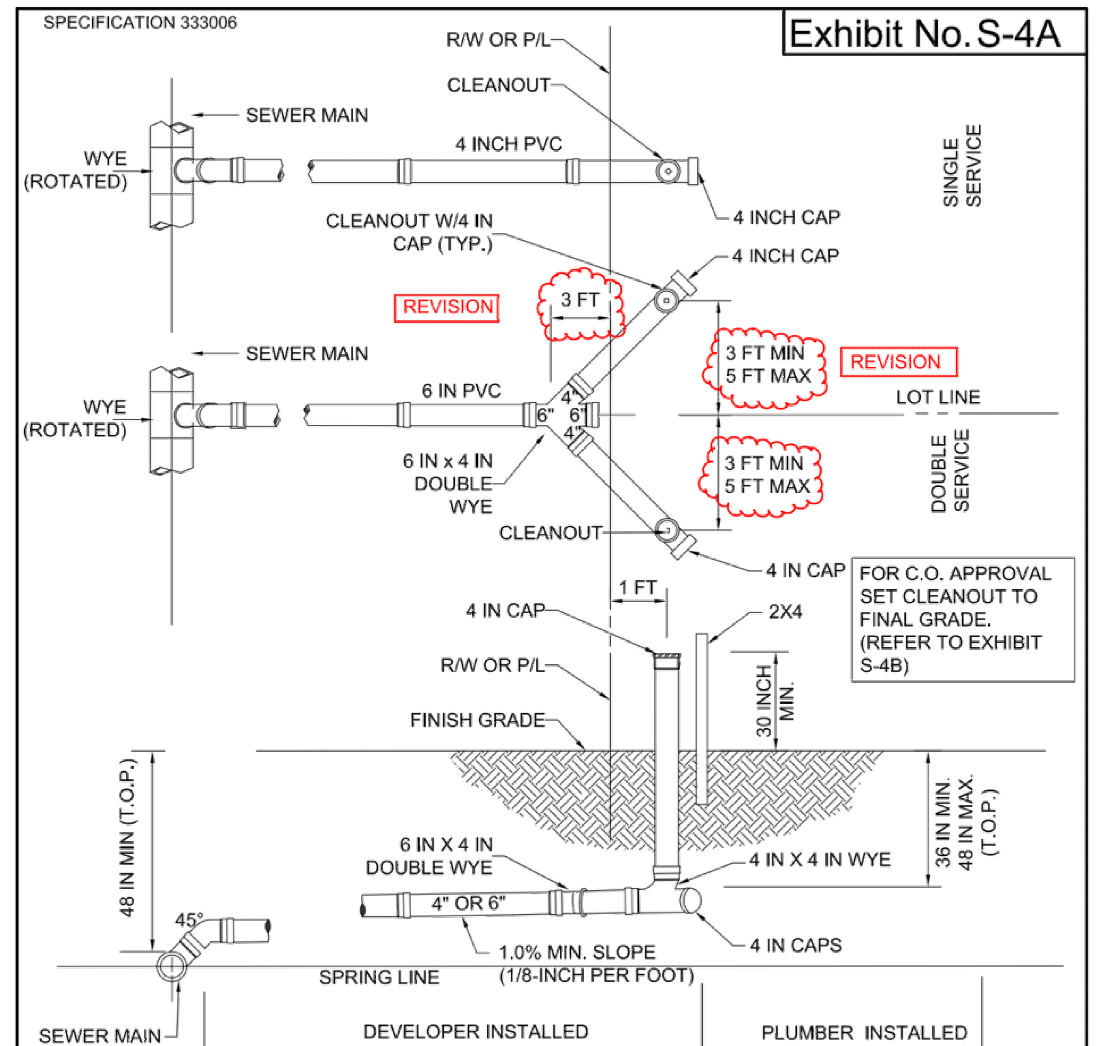

NOTES:
1. CENTER THE DOUBLE WYE FITTING ON THE LOT LINE.
2. INVERT OF SERVICE LATERAL SHALL NOT ENTER SEWER BELOW SPRING LINE.
3. THE TOP OF THE CLEANOUT SHALL TERMINATE 30 TO 40 INCHES ABOVE DESIGN GRADE UNTIL CONNECTION TO A STRUCTURE IS MADE.
4. ALL LATERALS SHALL BE CONSTRUCTED OF SDR 26 PVC.
5. ALL LATERAL LOCATIONS SHALL BE MARKED WITH AN "S" SAW CUT INTO THE TOP OF CURB.

TYPICAL PVC SANITARY SEWER NEW CONNECTION W/CLEANOUT	09/2014
HILLSBOROUGH COUNTY, FLORIDA	SCALE: N.T.S.

SPECIFICATION 333006

Exhibit No. S-4B

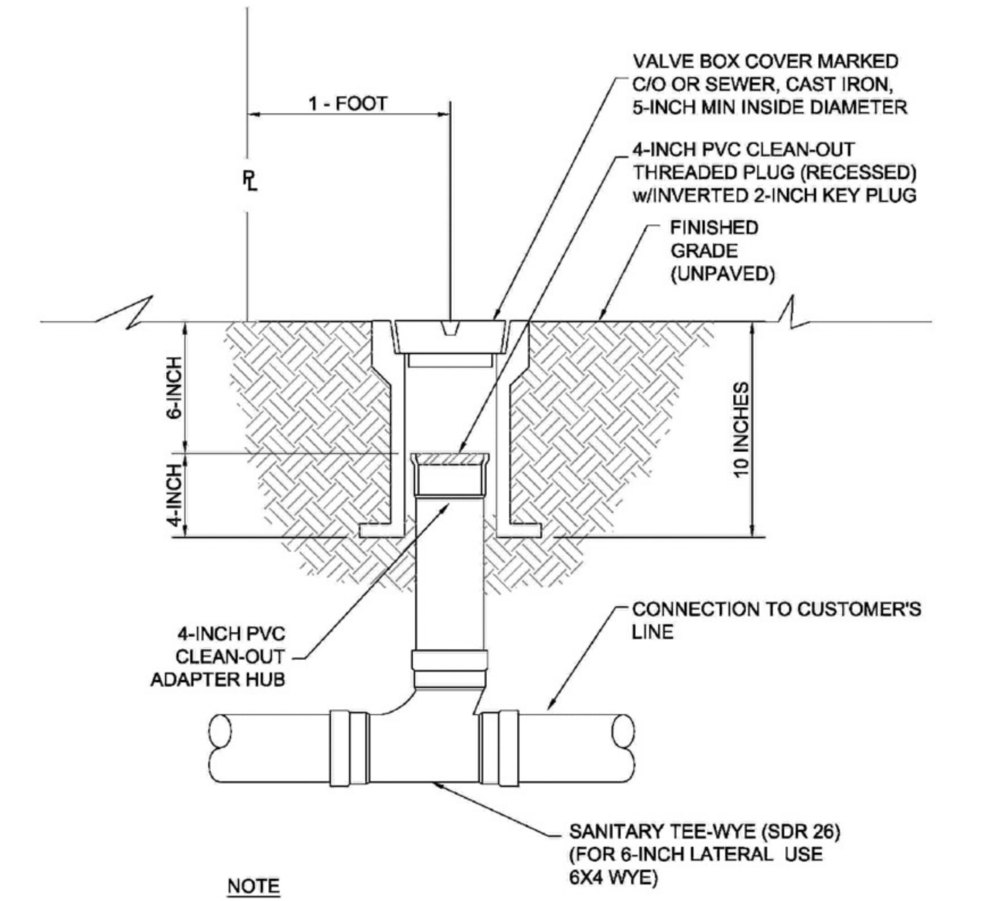

NOTE
1. ALL PIPING AND FITTINGS TO BE PVC SDR 26

CLEAN-OUT DETAIL WITH VALVE BOX COVER	10/2013
HILLSBOROUGH COUNTY, FLORIDA	SCALE: N.T.S.

SPECIFICATION 333006

Exhibit No. S-5A

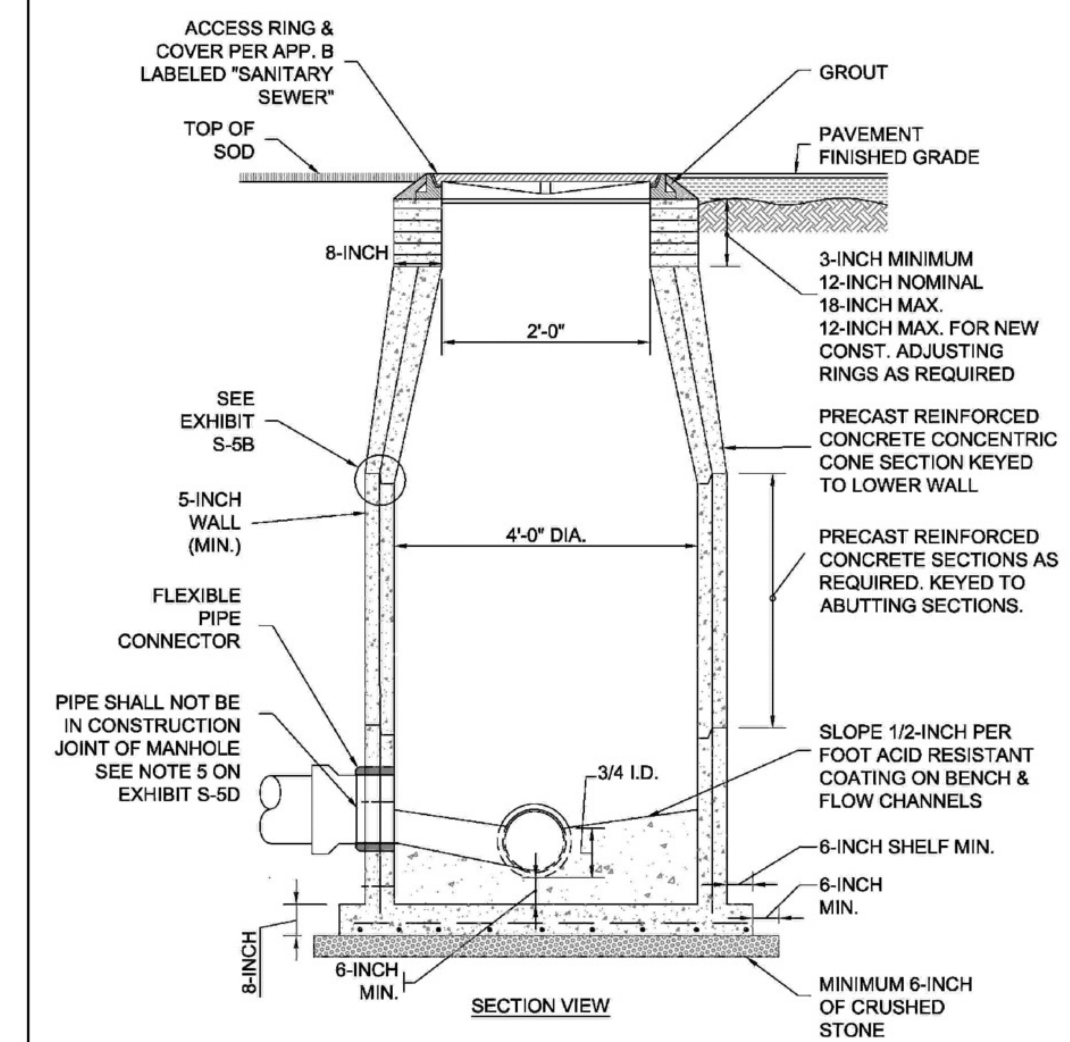

NOTE:
ALL STANDARD MANHOLE NOTES APPLY. REFER TO EXHIBIT No. S-5D. THIS DETAIL APPLIES TO MANHOLES WITH DEPTHS OF 5 FT TO 15 FT. IF DEPTH TO INVERT IS LESS THAN 5 FT, DESIGN EXCEPTION APPROVAL BY PUBLIC UTILITIES DEPARTMENT IS REQUIRED

STANDARD 48" PRECAST MANHOLE FOR SEWERS 16" OR LESS IN DIA	10/2013
HILLSBOROUGH COUNTY, FLORIDA	SCALE: N.T.S.

SPECIFICATION 333006

Exhibit No. S-5B

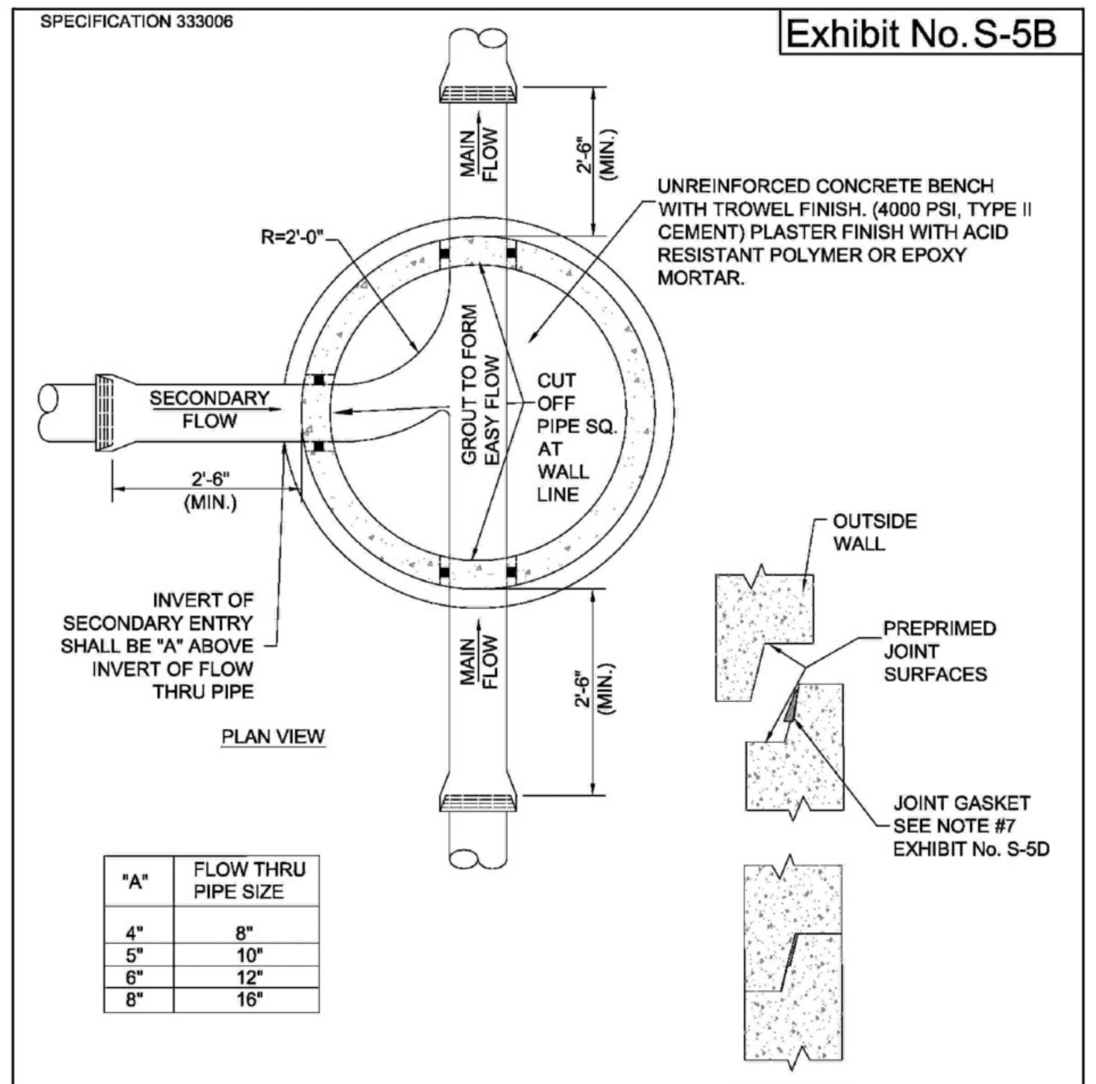

"A"	FLOW THRU PIPE SIZE
4"	8"
5"	10"
6"	12"
8"	16"

NOTE:
ALL STANDARD MANHOLE NOTES APPLY. REFER TO EXHIBIT No. S-5D.

STANDARD 48" PRECAST MANHOLE FOR SEWERS 16" OR LESS IN DIA	10/2013
HILLSBOROUGH COUNTY, FLORIDA	SCALE: N.T.S.

SPECIFICATION 333006

Exhibit No. S-18

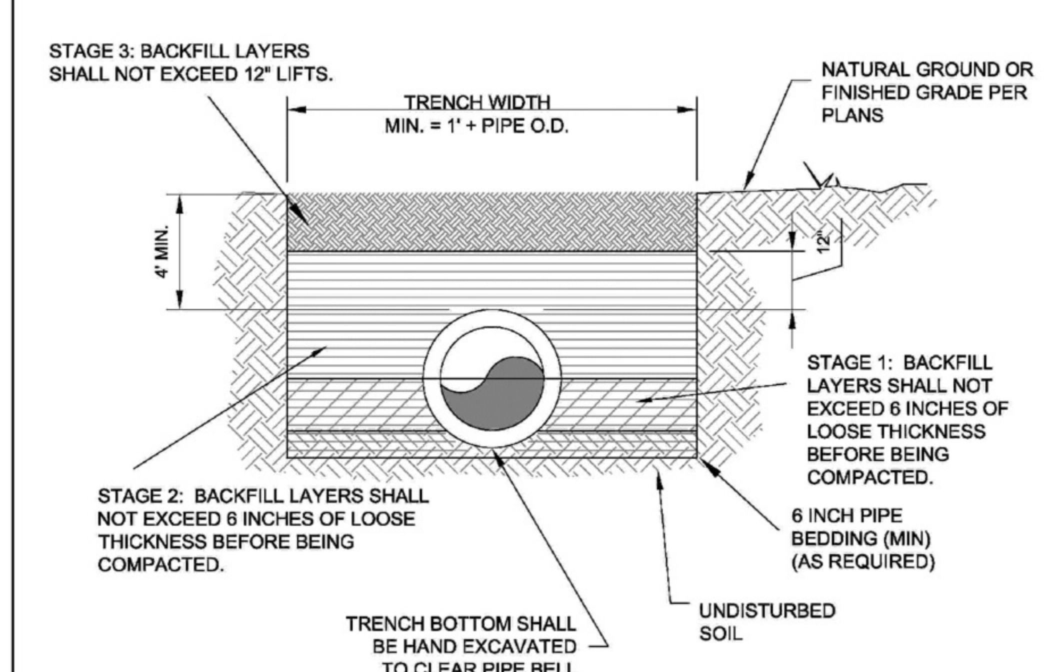

NOTES:
1. TESTING: SEE 333001 or 333002, PART 4.11 FOR TESTING REQUIREMENTS.
2. BEDDING: 6 INCH BEDDING (MIN) AS REQUIRED. IN THE EVENT UNSUITABLE OR UNSTABLE SOIL IS ENCOUNTERED, REMOVE IT AND REPLACE WITH MATERIAL MEETING AASHTO SOIL CLASSIFICATION A-1, A-2, OR A-3. SEE 333001 or 333002 SECTION 4.4.
3. STAGE 1: ADEQUATE COMPACTED FILL SHALL BE PLACED ABOVE THE BEDDING MATERIAL AND BENEATH THE HAUNCHES OF THE PIPE. BACKFILL LAYERS SHALL NOT EXCEED 6 INCHES OF LOOSE THICKNESS BEFORE BEING COMPACTED.
4. STAGE 2: BACKFILL LAYERS SHALL NOT EXCEED 6 INCH OF LOOSE THICKNESS BEFORE BEING COMPACTED. COMPACTION SHALL BE 98% OF THE MAXIMUM DENSITY (AASHTO T-180/ASTM D1557) TO A POINT 1 FT ABOVE THE PIPE (OR AS STATED IN THE SPECIFICATION).
5. STAGE 3: BACKFILL LAYERS SHALL NOT EXCEED 12 INCH LIFTS. COMPACTION SHALL BE 98% OF THE MAXIMUM DENSITY (AASHTO T-180/ASTM D1557) OR AS STATED IN THE SPECIFICATION

TRENCH DETAIL BACKFILL & COMPACTION	10/2013
HILLSBOROUGH COUNTY, FLORIDA	SCALE: N.T.S.

SPECIFICATION 333006

Exhibit No. S-5D

NOTES:
1. PRECAST MANHOLE SECTIONS & BASES SHALL BE MANUFACTURED IN ACCORDANCE WITH LATEST EDITION OF ASTM C478 WITH 4000 P.S.I., TYPE II CEMENT (ASTM C150).
2. CONCRETE PLACED IN MANHOLE INVERTS SHALL HAVE A MINIMUM 28 DAY COMPRESSIVE STRENGTH OF 4000 P.S.I. AND SHALL UTILIZE TYPE II CEMENT.
3. LIFT HOLES THROUGH PRECAST STRUCTURES ARE NOT PERMITTED.
4. ALL PIPE PENETRATIONS SHALL BE PRECAST OR CORE-DRILLED. THE PERIMETER OF A PENETRATION SHALL NOT BE CLOSER THAN 12 INCHES TO A BARREL SECTION JOINT.
5. FLEXIBLE PIPE CONNECTORS (ASTM C293) SHALL BE USED AT ALL PIPE PENETRATIONS.
6. JOINT CONTACT SURFACES SHALL BE SEALED USING A GASKET PER THE MANUFACTURER'S RECOMMENDATION. GASKETS SHALL BE 1/2 INCH THICK WITH WIDTH AT LEAST 1/2 THE WALL THICKNESS.
7. THE INTERIOR OF THE ADJUSTMENT SECTION (GRADE RINGS) SHALL BE PLASTERED WITH 3/4 INCH ACID RESISTANT MORTAR WHEN CONCRETE IS USED. OTHER APPROVED EQUAL CONSTRUCTION MAY BE CONSIDERED.
8. THE MANHOLE COVER SHALL BE EQUIPPED WITH AN INFLOW PROTECTOR AND SHALL COMPLY WITH THE APPROVED PRODUCTS LIST IN APP. B.
9. BOTTOM BARREL AND BASE OF MANHOLE TO BE MONOLITHICALLY OR INTEGRALLY CAST.
10. SERVICE LATERALS SHALL NOT ENTER MANHOLES UNLESS SPECIFIED ON THE PLANS AND THEN MUST BE TREATED AS MAINS (SHOW ELEVATIONS, PRECAST OR CORE-DRILLED PENETRATIONS, FLOW CHANNEL CONSTRUCTION, ETC.).
11. AN OUTSIDE DROP CONNECTION SHALL BE REQUIRED FOR ALL INFLUENT LINES WHICH HAVE AN INVERT 2-FOOT OR MORE ABOVE THE MANHOLE INVERT.
12. FOR NONSTANDARD MANHOLES, THE ENGINEER OF RECORD SHALL DESIGN ALL MANHOLE REINFORCEMENT STEEL AND JOINT DETAILS AND SHALL SUBMIT CALCULATIONS TO THE COUNTY FOR REVIEW.
13. PRECAST OR CORE-DRILLED PENETRATION DIAMETERS SHALL BE PER MANUFACTURER SPECIFICATIONS OR AS FOLLOWS:
10 INCH TO 12 INCH FOR 8 INCH DIAMETER PIPE.
12 INCH TO 16 INCH FOR 10 INCH DIAMETER PIPE.
16 INCH FOR 12 INCH DIAMETER PIPE.
14. MATERIALS OF CONSTRUCTION, PLACEMENT, AND COMPACTION REQUIREMENTS FOR BEDDING MATERIALS SHALL BE PER COUNTY SPECIFICATIONS.
15. FLOW CHANNELS SHALL BE CONSTRUCTED TO DIRECT INFLUENT INTO THE FLOW STREAM.
16. PROPERLY SHAPED SPILLWAYS SHALL BE CONSTRUCTED BETWEEN PIPES WITH DIFFERENT INVERT ELEVATIONS TO PROVIDE FOR SMOOTH FLOWS.

STANDARD NOTES PRECAST MANHOLES	10/2013
HILLSBOROUGH COUNTY, FLORIDA	SCALE: N.T.S.

SPECIFICATION 333006

Exhibit No. S-6A

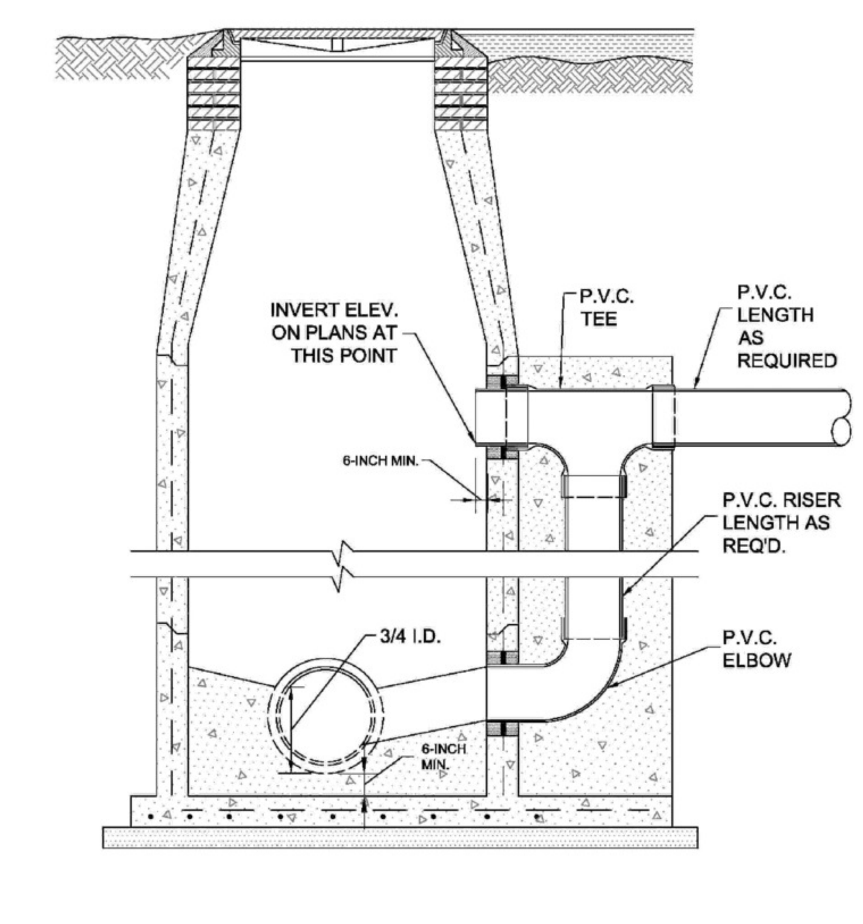

NOTE:
ALL STANDARD MANHOLE NOTES AND DETAILS APPLY. REFER TO EXHIBITS S-5A THROUGH S-5D

TYPICAL DROP MANHOLE - OUTSIDE FOR GRAVITY INTO GRAVITY	10/2013
HILLSBOROUGH COUNTY, FLORIDA	SCALE: N.T.S.

Q:\CIVIL\5163\905\000\Production\Drawings\DET-SAN.dwg , February 11, 2015 10:40 AM , King Engineering Associate Inc.

© COPYRIGHT 2014 KING ENGINEERING ASSOCIATES, INC. DRAWINGS AND CONCEPTS MAY NOT BE USED OR REPRODUCED WITHOUT WRITTEN PERMISSION CONSENT IS HEREBY GRANTED SPECIFICALLY TO GOVERNMENTAL AGENCIES TO REPRODUCE THIS DOCUMENT IN COMPLIANCE WITH F.S. CHAPTER 119.

DESIGNED JLW
DRAWN JLW
CHECKED TLT/AGK
Q.C. LFK

THE SIGNATURE OF THE QUALITY CONTROL OFFICER IN THIS SPACE INDICATES THAT ALL REQUIRED PERMITS HAVE BEEN OBTAINED AND THAT CONSTRUCTION IS AUTHORIZED TO COMMENCE.
MER 2/5/15

King ENGINEERING ASSOCIATES, INC.
4921 Memorial Highway
One Memorial Center, Suite 300
Tampa, Florida 33634
Phone 813 880-8881
Fax 813 880-8882
www.kingengineering.com
Engineering License #2610

THE OAKS AT SHADY CREEK, PHASE 2
FOR
LENNAR HOMES, LLC
4600 WEST CYPRESS ST. SUITE 200
TAMPA, FL. 34683
813-574-5653

SANITARY SEWER DETAILS

NO.	DATE	DESCRIPTION	APP'D BY

JOB NO. 5163-905-000
DATE: 10-28-2014
SCALE: AS SHOWN
SHEET NO. C12.01
HC FINAL SET FEB. 11, 2015

PLANT SCHEDULE

TREES	CODE	QTY	BOTANICAL NAME	COMMON NAME	CONT	CAL	SIZE	NATIVE	DROUGHT TOLERANCE
	MG	80	Magnolia grandiflora	Southern Magnolia	30 gal	2"Cal	8-10' Ht. 4-5' Spd.	Yes	Medium
	QL	72	Quercus laurifolia	Laurel Oak	30 gal	2"Cal	8-10' Ht. 4-5' Spd.	Yes	Medium
	QV2	88	Quercus virginiana	Southern Live Oak	30 gal	2"Cal	8-10' Ht. 4-5' Spd.	Yes	High
	TD2	85	Taxodium distichum	Bald Cypress	45 gal	3"Cal	10-12' Ht. 5-6' Spd.	Yes	High
	UA	88	Ulmus alata	Winged Elm	30 gal	2"Cal	8-10' Ht. 4-5' Spd.	Yes	High

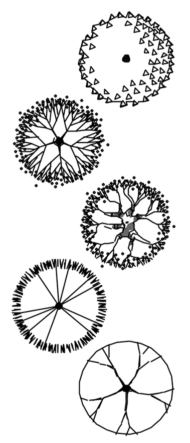

NOTES:

1. Lot 24 (7,788 s.f.); Lot 25 (7,973 s.f.); Lot 27 (7,109 s.f.); Lot 28 (8,364 s.f.); Lot 29 (7,610 s.f.); Lot 30 (7,083 s.f.); Lot 31 (7,065 s.f.); Lot 46 (7,226 s.f.); Lot 61 (7,283 s.f.); Lot 62 (8,059 s.f.); Lot 63 (7,116 s.f.); Lot 64 (7,488 s.f.); Lot 65 (8,831 s.f.); Lot 66 (8,831 s.f.); Lot 67 (8,830 s.f.); Lot 68 (9,721 s.f.); Lot 69 (9,686 s.f.); Lot 87 (7,441 s.f.); Lot 106 (7,226 s.f.); Lot 107 (7,226 s.f.); Lot 137 (7,226 s.f.); Lot 138 (7,226 s.f.); and Lot 145 (7,226 s.f.); shall require 2 lot trees. The remaining lots are less than 75' lot width and shall require 1 lot tree per Hillsborough County LDC.

2. This plan satisfies all required street trees, lot trees and replacement trees for Phase 1 and a portion of the Tree Replacements will be required within Phase II.

3. Street Trees required: 160 trees (160" DBH)
Lot Trees required: 168 trees (168" DBH)
Tree replacement required: 549 trees (549 DBH)
*(Tree replacement provided in phase 1 = 379" DBH)
*(Tree replacement provided in phase 2 = 170" DBH)
* Remaining replacement inches required per phase 1 approved construction plans for the overall site requirements.

Total Inches of DBH Required: 877"
Total inches of DBH Provided: 498" in Phase 2 (Phase 1 approval has 379" DBH to satisfy the tree replacement required for the overall project of 549" DBH)

4. Tree locations are as graphically depicted, final locations shall be determined by the Owner/Developer and subject to change due to utilities and easement locations.

5. The construction of all above ground utility appurtenances visible from the public right-of-way such as pedestals, utility meters, transformers, back-flow prevention devices, etc. for new development or redevelopment activities shall conform to screening requirements as outlined in Section 6.06.06.C.10 of the Hillsborough County Land Development Code. Plant location must be considerate of required spatial separations from a fire flow protection appliance in accordance to the Uniform Fire Code.

6. Proposed above ground utilities appurtenances visible from the public right-of-way are typically 3' tall and shall be completely screened by plantings a minimum of 3' high at the time of planting.

NOTE: THIS PERMIT PLAN MEETS THE MINIMUM CRITERIA AS REQUIRED BY THE LAND DEVELOPMENT CODE. THE OWNER MAY INSTALL ADDITIONAL LANDSCAPING AT HIS DISCRETION.

NOTE:
ALL TREES SHALL BE PLANTED PER DETAIL BELOW AND IN ACCORDANCE WITH THIS PLAN. IF THESE SPACING CRITERIA CANNOT BE MET, STREET TREES WILL BE PLANTED WITHIN THE FIRST 5 FEET OF THE FRONT YARD OF THE LOT OR WITHIN 5' OF THE RIGHT-OF-WAY.

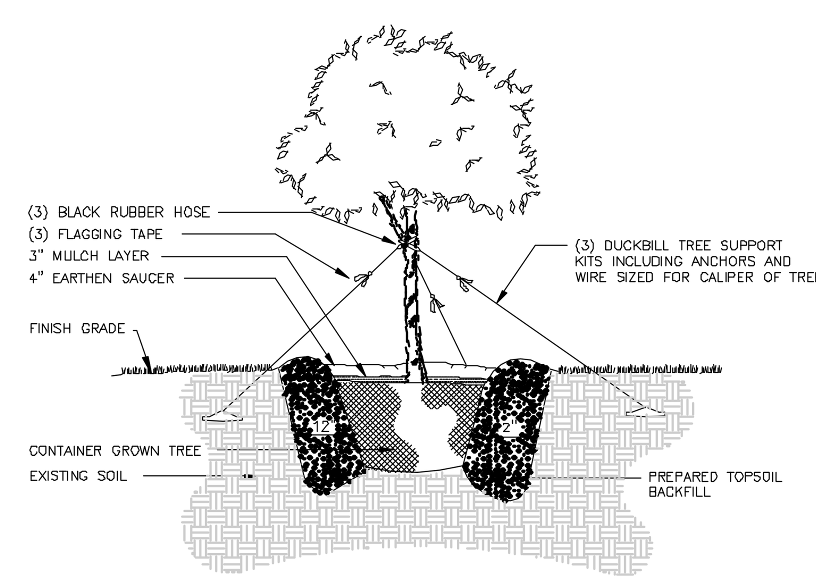

TREE PLANTING DETAIL
N.T.S.

TREE CALCULATIONS

TREE REPLACEMENT REQUIREMENT:	50% OF TREES OVER 24" DBH
DBH OVER 24" PROPOSED FOR REMOVAL:	1,098 DBH
50% REPLACEMENT REQUIRED:	549 DBH
GRAND OAK REPLACEMENT REQUIREMENT:	1:1 FOR 34-48", 1.5:1 FOR 48-60", 2:1 FOR 60"+
34-48" GRAND OAK REMOVAL:	N/A DBH
48-60" GRAND OAK REMOVAL:	N/A DBH
OVER 60" GRAND OAK REMOVAL:	N/A DBH
GRAND OAK REPLACEMENT:	N/A DBH
TREES REPLACEMENT REQUIRED:	549 DBH
TREES REPLACEMENT PROPOSED:	170 DBH SHALL BE REPLACED IN PHASE 2 (379 DBH REPLACED IN PHASE 1)

MISCELLANEOUS NOTES

1. THIS PERMIT PLAN MEETS THE MINIMUM CRITERIA AS REQUIRED BY THE LAND DEVELOPMENT CODE. THE OWNER MAY INSTALL ADDITIONAL LANDSCAPING AT HIS DISCRETION.

2. ALL TREES TO BE LOCATED IN CONFORMANCE WITH THE MORE STRINGENT CLEAR ZONE REQUIREMENTS OF EITHER TABLE 3-12 OF THE FDOT MANUAL OF UNIFORM STANDARDS FOR DESIGN, CONSTRUCTION AND MAINTENANCE FOR STREET AND HIGHWAYS (GREEN BOOK) OR SECTION 3.4 OF THE HILLSBOROUGH TRANSPORTATION MANUAL.

3. ALL TREES SHALL BE PLANTED PER DETAIL ON SHEET L1.01 AND IN ACCORDANCE WITH THIS PLAN. IF THE SPACING CRITERIA CANNOT BE MET, STREET TREES WILL BE PLANTED WITHIN THE FIRST 5 FEET OF THE FRONT YARD OF THE LOT OR WITHIN 5' OF THE RIGHT-OF-WAY.

LANDSCAPING NOTES

ALL TREES SHALL BE FLORIDA GRADE NO. 1 OR BETTER.

NO TREES SHALL BE PLANTED CLOSER THAN 30 FEET TO A STOP SIGN.

STREET TREES SHALL BE PLANTED WITHIN THE ROAD RIGHT-OF-WAY A MINIMUM OF FIVE (5) FEET FROM THE BACK OF CURB AND A MINIMUM OF THREE (3) FEET FROM THE INSIDE EDGE OF A PROPOSED OR ESTABLISHED SIDEWALK. WHEN POSSIBLE, STREET TREES SHOULD BE CENTERED AND EVENLY SPACED IN FRONT OF THE LOT AND EVENLY SPACED ON ROADWAYS NOT FRONTED BY LOTS.

WHEN NOT FEASIBLE TO PLANT TREES IN THE ROAD RIGHT-OF-WAY, AS DETERMINED BY THE ADMINISTRATOR, PLANTINGS SHALL BE PERMITTED ON THE LOT, PROVIDED THE TREES ARE INSTALLED WITHIN FIVE FEET OF THE RIGHT-OF-WAY.

STREET TREES SHALL BE PLANTED A MINIMUM OF TEN FEET FROM ANY ABOVE GROUND UTILITY, SUCH AS TRANSFORMER PADS AND FIRE HYDRANTS.

MAXIMUM FLEXIBILITY SHALL BE GIVEN TO THE PLACEMENT OF STREET TREES TO ACCOMMODATE IMPROVEMENTS SUCH AS DRIVEWAYS, UTILITIES, LIGHTING, SITE TRIANGLE VISIBILITY, ETC. THE UTILITY NOTIFICATION CENTER SHOULD BE NOTIFIED TO VERIFY THE LOCATION OF UTILITY LINES PRIOR TO PLANTING.

STREET TREE PLANTINGS SHALL BE IN COMPLIANCE WITH THE PLANTING STANDARDS AND ROADWAY LANDSCAPING GUIDELINES DESCRIBED IN GUIDELINES FOR LANDSCAPING HILLSBOROUGH COUNTY ROADWAYS.

ALL STREET TREES SHOWN ALONG LOT FRONTAGE SHALL BE PLANTED AT TIME OF HOME CONSTRUCTION. ALL TREES SHOWN IN COMMON AREAS SHALL BE PLANTED PRIOR TO INFRASTRUCTURE ACCEPTANCE EXCEPT AS APPROVED BY HILLSBOROUGH COUNTY.

PLANT MATERIAL SHALL CONFORM TO THE STANDARDS FOR GRADE #1 OR BETTER AS GIVEN IN THE LATEST "GRADES AND STANDARDS FOR NURSERY PLANTS, PARTS I AND II," FLORIDA DEPARTMENT OF AGRICULTURE AND CONSUMER SERVICES OR TO THE STANDARDS AS GIVEN IN THE LATEST "AMERICAN STANDARD FOR NURSERY STOCK," AMERICAN NATIONAL STANDARDS INSTITUTE.

A LAYER OF MULCH TO A MINIMUM DEPTH OF THREE (3) INCHES SHALL BE PROVIDED IN PLANT BEDS AND AROUND INDIVIDUAL TREES IN TURF AREAS.

AT THE TIME OF PLANTING, A TREE SHALL HAVE A MINIMUM HEIGHT OF 6 FEET.

NOT MORE THAN 50% OF THE LANDSCAPED AREA MAY BE PLANTED WITH SHALLOW-ROOTED TURFGRASS VARIETIES.

THE PROPERTY OWNER SHALL BE RESPONSIBLE FOR THE MAINTENANCE OF ALL LANDSCAPED AREAS WHICH SHALL BE MAINTAINED IN GOOD CONDITION SO AS TO PRESENT A HEALTHY, NEAT AND ORDERLY APPEARANCE, FREE OF REFUSE, DEBRIS AND WEEDS.

TREE LEGEND

- 12" = 12" UNKNOWN TYPE TREE
- 12" = 12" CHERRY LAUREL
- 12" = 12" WILLOW TREE
- 12" = 12" HOLLY TREE
- 12" = 12" DEAD TREE
- 12" = 12" CHINESE TALLOW TREE
- 12" = 12" CHINABERRY TREE
- 12" = 12" OAK TREE
- 12" = 12" JACARANDA TREE
- 12" = 12" MULBERRY TREE
- 12" = 12" PALM TREE
- 12" = 12" BAY TREE
- 12" = 12" MAGNOLIA TREE
- 12" = 12" CITRUS TREE
- 12" = 12" PECAN TREE
- 12" = 12" EUCALYPTUS TREE
- 12" = 12" CAMPHOR TREE
- 12" = 12" SYCAMORE TREE
- 12" = 12" PINE TREE
- 12" = 12" AUSTRALIAN PINE
- 12" = 12" CEDAR TREE
- 12" = 12" ELM TREE
- 12" = 12" MAPLE TREE
- 12" = 12" WAX MYRTLE TREE
- 12" = 12" PUNK TREE
- 12" = 12" CYPRESS TREE
- 12" = 12" EAR TREE
- 12" = 12" SWEET GUM TREE
- 12" = 12" BIRCH
- 12" = 12" HICKORY

- 12" = TREE HAVING ONE TRUNK AT BREAST HEIGHT, 12" IN DIAMETER
- 12"13"5" = TREE HAVING MULTIPLE TRUNKS AT BREAST HEIGHT 12", 13" AND 5" IN DIAMETER

- 12" = PALM TRANSPLANT
- 12" = TREE SAVE
- 12" = TREE REMOVE

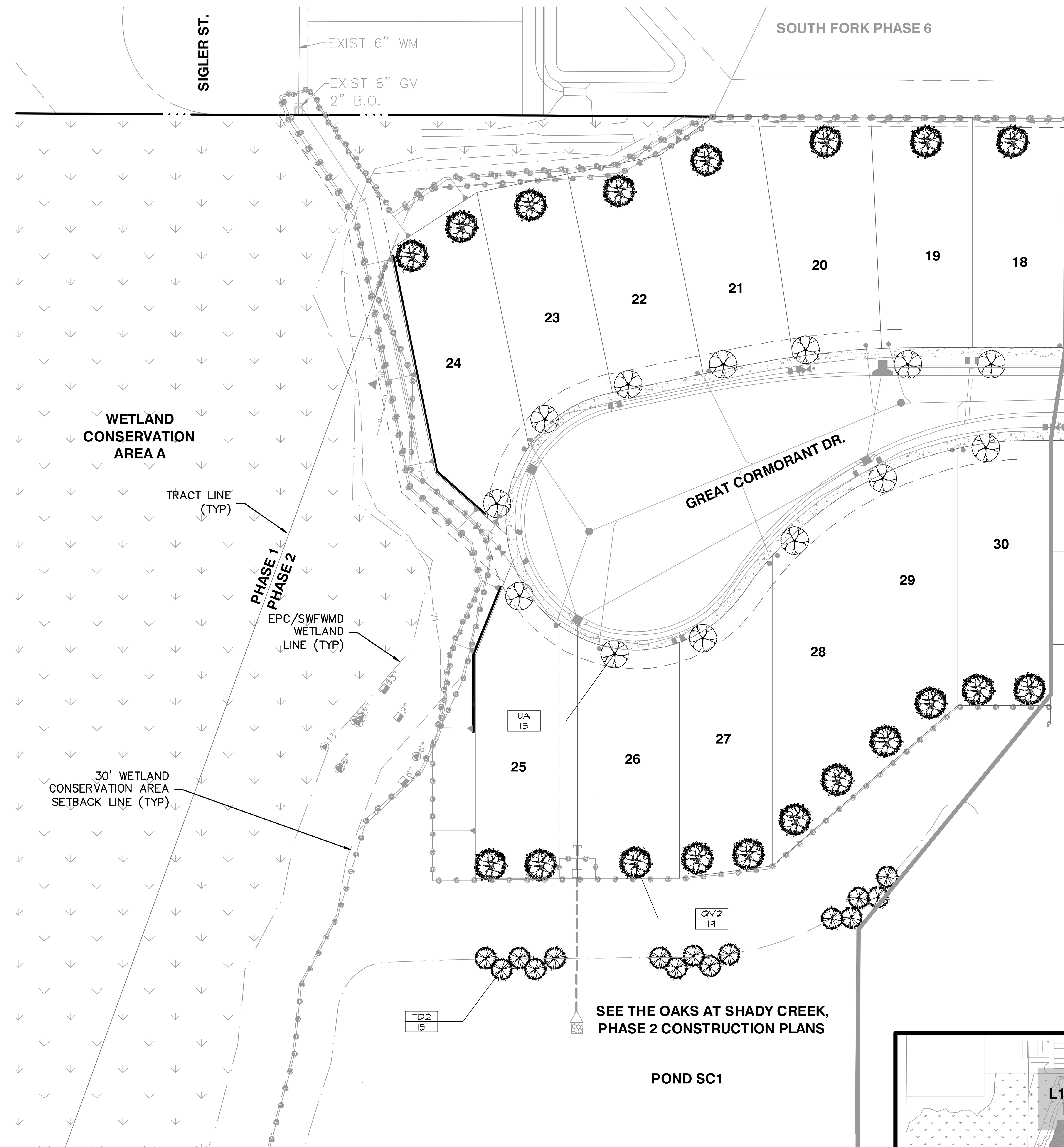

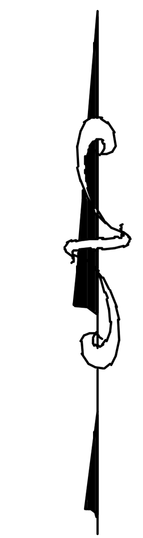

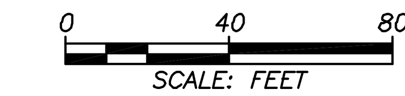

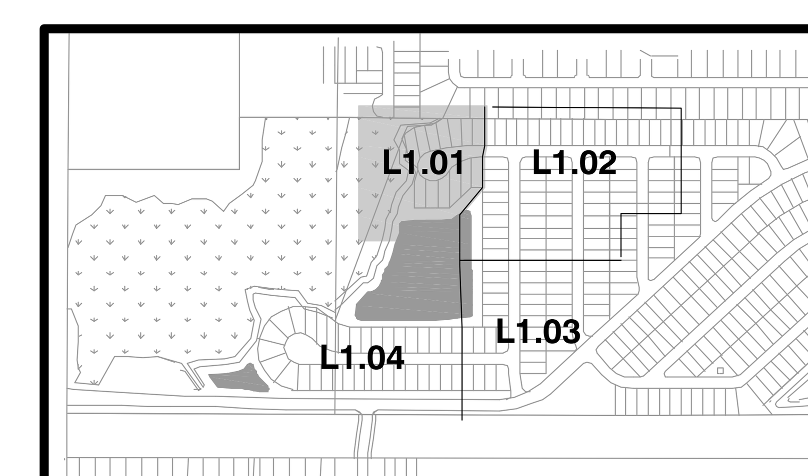

KEYMAP

Q:\CIVIL\5163\905\000\Production\Drawings\PLN-CLP-01.dwg , February 11, 2015 10:41 AM, King Engineering Associate Inc.
© COPYRIGHT 2014 KING ENGINEERING ASSOCIATES, INC. DRAWINGS AND CONCEPTS MAY NOT BE USED OR REPRODUCED WITHOUT WRITTEN PERMISSION CONSENT IS HEREBY GRANTED SPECIFICALLY TO GOVERNMENTAL AGENCIES TO REPRODUCE THIS DOCUMENT IN COMPLIANCE WITH F.S. CHAPTER 119.

DESIGNED	JLW
DRAWN	JLW
CHECKED	TLT/AGK
Q.C.	LJK

THE SIGNATURE OF THE QUALITY CONTROL OFFICER IN THIS SPACE INDICATES THAT ALL REQUIRED PERMITS HAVE BEEN OBTAINED AND THAT CONSTRUCTION IS AUTHORIZED TO COMMENCE.
MER 2/5/15

King ENGINEERING ASSOCIATES, INC.
4921 Memorial Highway
One Memorial Center, Suite 300
Tampa, Florida 33634
Phone 813 880-8881
Fax 813 880-8882
www.kingengineering.com
Engineering License #2610

THE OAKS AT SHADY CREEK, PHASE 2
FOR
LENNAR HOMES, LLC
4600 WEST CYPRESS ST. SUITE 200
TAMPA, FL. 34683
813-574-5653

STREET TREE PLAN

NO.	DATE	DESCRIPTION	APP'D BY

CLARK L. LOHMILLER
L.A. 6667167

JOB NO.	5163-905-000
DATE:	10-28-2014
SCALE:	AS SHOWN
SHEET NO.	L1.01

HC FINAL SET
FEB. 11, 2015

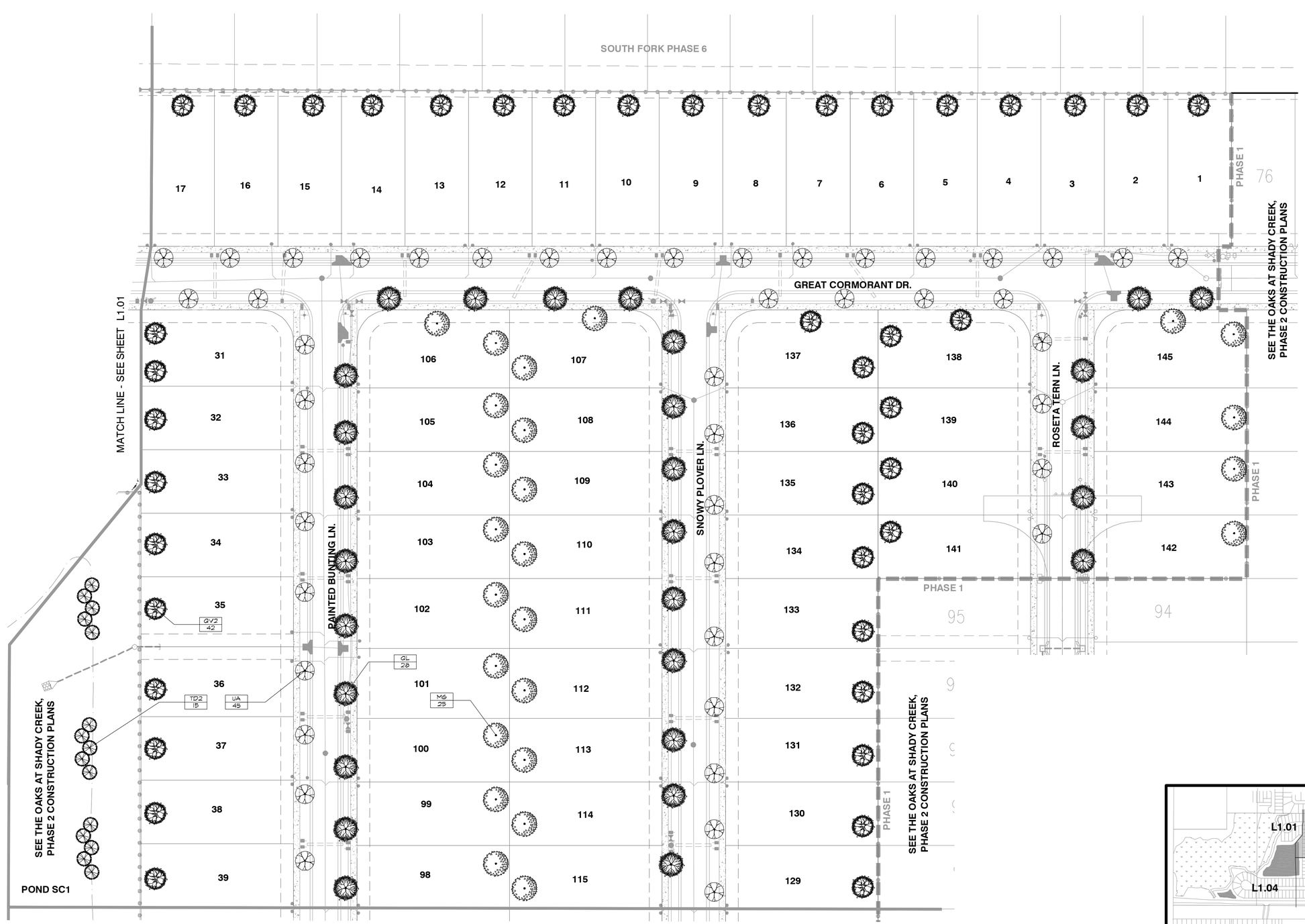

MATCH LINE - SEE SHEET L1.03

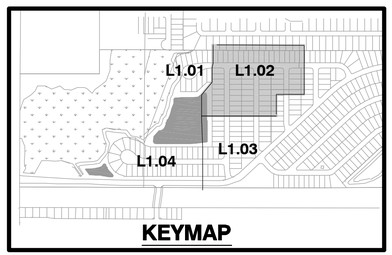

© COPYRIGHT 2014 KING ENGINEERING ASSOCIATES, INC. DRAWINGS AND CONCEPTS MAY NOT BE USED OR REPRODUCED WITHOUT WRITTEN PERMISSION CONSENT IS HEREBY GRANTED EXCLUSIVELY TO CONTRACTORS, AGENCIES TO REPRODUCE THE DOCUMENT IN COMPLIANCE WITH FL CHAPTER 119.

Q:\CIVIL\5163\905\000\Production\Drawings\PLN\CLP-02.dwg , February 11, 2015 10:42 AM , King Engineering Associate Inc.

DESIGNED JLW	THE SIGNATURE OF THE QUALITY CONTROL OFFICER IN THIS SPACE INDICATES THAT ALL REQUIRED PERMITS HAVE BEEN OBTAINED AND THAT CONSTRUCTION IS AUTHORIZED TO COMMENCE.	King ENGINEERING ASSOCIATES, INC.	4921 Memorial Highway One Memorial Center, Suite 300 Tampa, Florida 33634 Phone 813 880-8881 Fax 813 880-8882 www.kingengineering.com Engineering License #2610	**THE OAKS AT SHADY CREEK, PHASE 2** FOR **LENNAR HOMES, LLC** 4600 WEST CYPRESS ST. SUITE 200 TAMPA, FL. 34683 813-574-5653	**STREET TREE PLAN**
DRAWN JLW					
CHECKED TLT/AGK					
Q.C. LFK	MSR 2/5/15				

NO.	DATE	DESCRIPTION	APP'D BY

CLARK L. LOHMILLER
L.A. 6667167

JOB NO. 5163-905-000
DATE: 10-28-2014
SCALE: AS SHOWN
SHEET NO. L1.02
HC FINAL SET
FEB. 11, 2015

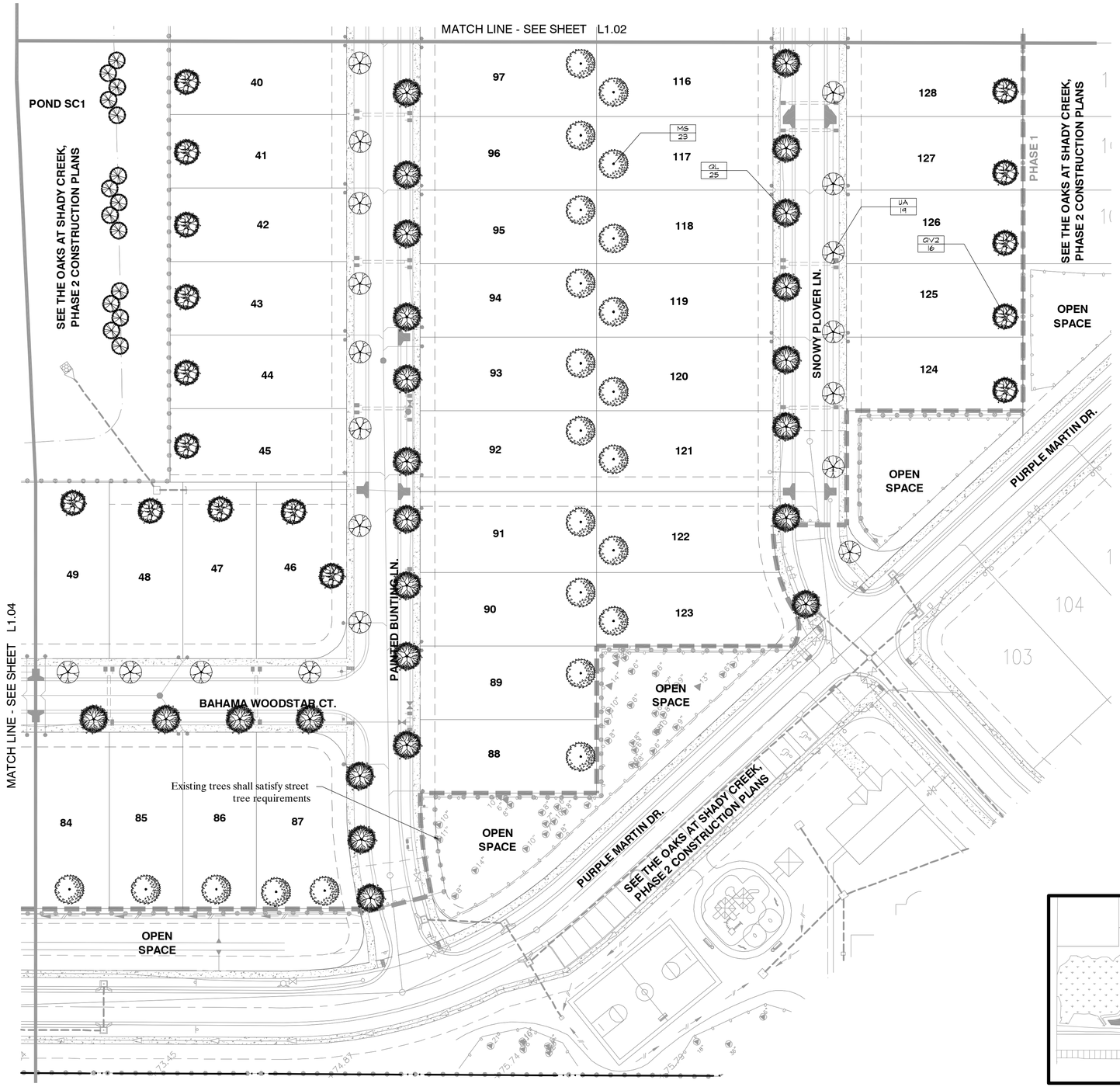

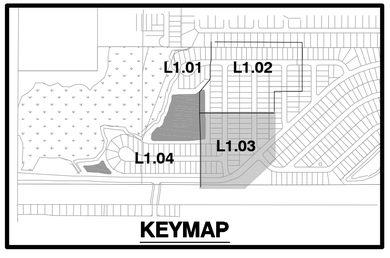

Q:\CIVIL\5163905\000\Production\Drawings\PLN-CLP-03.dwg , February 11, 2015 10:42 AM, King Engineering Associate Inc.
© COPYRIGHT 2014 KING ENGINEERING ASSOCIATES, INC. DRAWINGS AND CONCEPTS MAY NOT BE USED OR REPRODUCED WITHOUT WRITTEN PERMISSION CONSENT. IT IS HEREBY PRAYED ESPECIALLY TO GOVERNMENTAL AGENCIES TO REPRODUCE THIS DOCUMENT IN COMPLIANCE WITH F.S. CHAPTER 119.

DESIGNED JLW
DRAWN JLW
CHECKED TLT/AGK
Q.C. LGK

THE SIGNATURE OF THE QUALITY CONTROL OFFICER IN THIS SPACE INDICATES THAT ALL REQUIRED PERMITS HAVE BEEN OBTAINED AND THAT CONSTRUCTION IS AUTHORIZED TO COMMENCE.

MBR 2/5/15

King ENGINEERING ASSOCIATES, INC.
4921 Memorial Highway
One Memorial Center, Suite 300
Tampa, Florida 33634
Phone 813 880-8881
Fax 813 880-8882
www.kingengineering.com
Engineering License #2610

THE OAKS AT SHADY CREEK, PHASE 2

FOR

LENNAR HOMES, LLC
4600 WEST CYPRESS ST. SUITE 200
TAMPA, FL. 34683
813-574-5653

STREET TREE PLAN

NO.	DATE	DESCRIPTION	APP'D BY

CLARK L. LOHMILLER
L.A. 6667167

JOB NO. 5163-905-000
DATE: 10-28-2014
SCALE: AS SHOWN

SHEET NO. L1.03

HC FINAL SET
FEB. 11, 2015

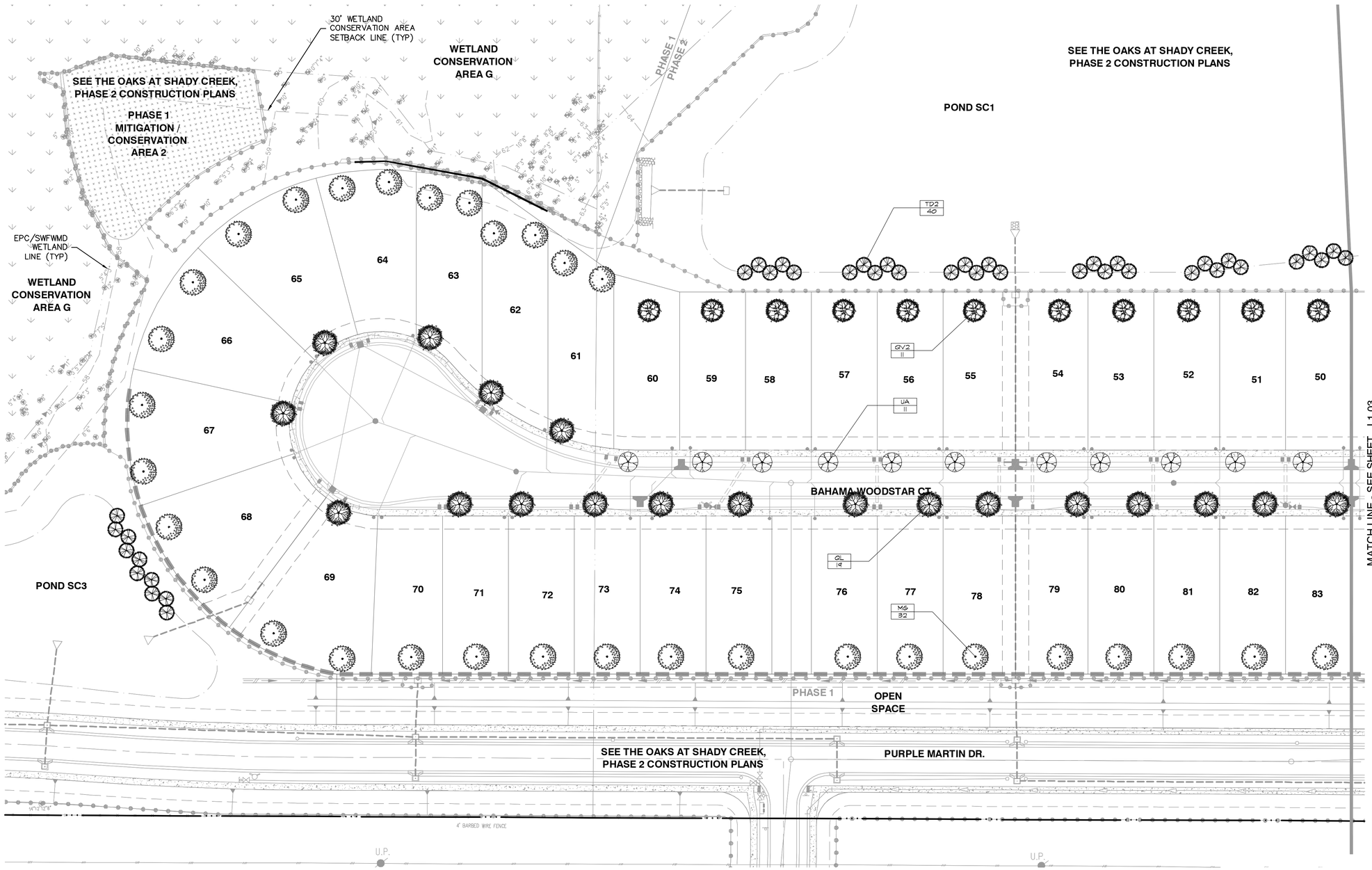

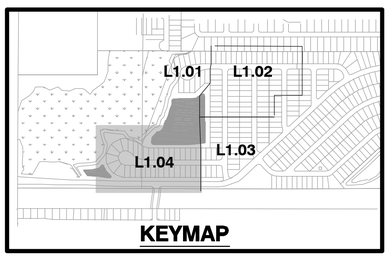

© COPYRIGHT 2014 KING ENGINEERING ASSOCIATES, INC. DRAWINGS AND CONCEPTS MAY NOT BE USED OR REPRODUCED WITHOUT WRITTEN PERMISSION CONSULT IS HEREBY GRANTED EXCLUSIVELY TO GOVERNMENTAL AGENCIES TO REPRODUCE THIS DOCUMENT IN COMPLIANCE WITH F.S. CHAPTER 119.

Q:\CIVIL\5163\905\000\Production\Drawings\PLN-CLP-04.dwg February 11, 2015 10:43 AM King Engineering Associate Inc.

DESIGNED JLW DRAWN JLW CHECKED TLT/AGK Q.C. LGK	THE SIGNATURE OF THE QUALITY CONTROL OFFICER IN THIS SPACE INDICATES THAT ALL REQUIRED PERMITS HAVE BEEN OBTAINED AND THAT CONSTRUCTION IS AUTHORIZED TO COMMENCE. MBR 2/5/15	King ENGINEERING ASSOCIATES, INC. 4921 Memorial Highway One Memorial Center, Suite 300 Tampa, Florida 33634 Phone 813 880-8881 Fax 813 880-8882 www.kingengineering.com Engineering License #2610	**THE OAKS AT SHADY CREEK, PHASE 2** FOR **LENNAR HOMES, LLC** 4600 WEST CYPRESS ST. SUITE 200 TAMPA, FL. 34683 813-574-5653	**STREET TREE PLAN**	CLARK L. LOHMILLER L.A. 6667167

NO.	DATE	DESCRIPTION	APP'D BY

JOB NO. 5163-905-000	SHEET NO. L1.04
DATE: 10-28-2014	
SCALE: AS SHOWN	
HC FINAL SET FEB. 11, 2015	

IRRIGATION NOTES:

ALL LANDSCAPED AREAS SHALL BE PROVIDED WITH AN IRRIGATION SYSTEM THAT SUPPLIES 100% COVERAGE TO ALL REQUIRED LANDSCAPING MATERIAL. THE IRRIGATION SYSTEM MAY CONSIST OF AN AUTOMATIC OR MANUAL UNDERGROUND SYSTEM, DRIP SYSTEM, QUICK COUPLING VALVES, OR HOSE BIBS WITHIN 50 FEET OF ALL REQUIRED LANDSCAPING PLANT MATERIAL. A LOW VOLUME IRRIGATION SYSTEM SHALL BE USED WHEREVER POSSIBLE.

THE IRRIGATION SYSTEM WILL BE DESIGNED TO MINIMIZE ROOT DISTURBANCE TO EXISTING TREES AND OTHER VEGETATION TO BE RETAINED. NO IRRIGATION IS REQUIRED WITHIN THESE AREAS.

IRRIGATION ZONES ARE DELINEATED AS MICRO-IRRIGATION OR WITH IRRIGATION TECHNIQUES OTHER THAN MICRO-IRRIGATION. TURF AREAS ARE TO BE ON SEPARATE IRRIGATION ZONES FROM OTHER LANDSCAPE PLANT ZONES. IRRIGATION SPRAYS AND ROTORS ARE NOT TO BE COMBINED ON THE SAME CONTROL VALVE CIRCUIT.

THE IRRIGATION SYSTEM WILL AVOID OVER-SPRAY AND RUNOFF ONTO WALKWAYS, ROADWAYS, STRUCTURES OR OTHER NON-LANDSCAPED AREAS. FOUR FEET WIDE OR LESS LANDSCAPE AREAS SHALL CONTAIN MICRO-IRRIGATION ONLY. SPRINKLER SPACING SHALL NOT EXCEED 55% OF THE SPRINKLER'S DIAMETER OF COVERAGE.

THE IRRIGATION CONTROL EQUIPMENT WILL INCLUDE AN AUTOMATIC IRRIGATION CONTROLLER WITH PROGRAM FLEXIBILITY. UNLESS MECHANICAL, THE AUTOMATIC IRRIGATION CONTROLLER MUST CONTAIN A BATTERY BACKUP TO RETAIN IRRIGATION PROGRAMS. AN OPERABLE RAIN SENSOR DEVICE MUST BE INSTALLED EXPOSED TO UNOBSTRUCTED RAINFALL.

THE IRRIGATION SYSTEM WILL BE DESIGNED TO STANDARDS AND SPECIFICATIONS FOR TURF AND LANDSCAPE IRRIGATION SYSTEMS, FOURTH EDITION, 2000, FLORIDA IRRIGATION SOCIETY.

THE "HILLSBOROUGH COUNTY INSTALLATION CERTIFICATION FOR LANDSCAPE IRRIGATION SYSTEMS ON COMMERCIAL PROPERTIES" SHALL BE FILLED OUT AND SUBMITTED BY THE IRRIGATION CONTRACTOR ASSERTING THAT ALL OF THE ABOVE CONDITIONS HAVE BEEN MET. THIS FORM WILL BE SUBMITTED WITH THE IRRIGATION PLAN BY THE IRRIGATION CONTRACTOR TO THE NATURAL RESOURCE TEAM OF THE PLANNING AND GROWTH MANAGEMENT DEPARTMENT UPON REQUEST FOR A FINAL LANDSCAPE INSPECTION TO OBTAIN A BUILDING CERTIFICATE OF OCCUPANCY.

THE UNDERGROUND IRRIGATION PIPES PROPOSED THAT ARE NEAR EXISTING TREES THAT ARE TO REMAIN MUST BE HAND DUG TO AVOID ROOT DISTURBANCE.

LEGEND:

MICRO-IRRIGATION ZONES (BUBBLERS)

NON MICRO-IRRIGATION ZONES (ALL SOD AREAS)

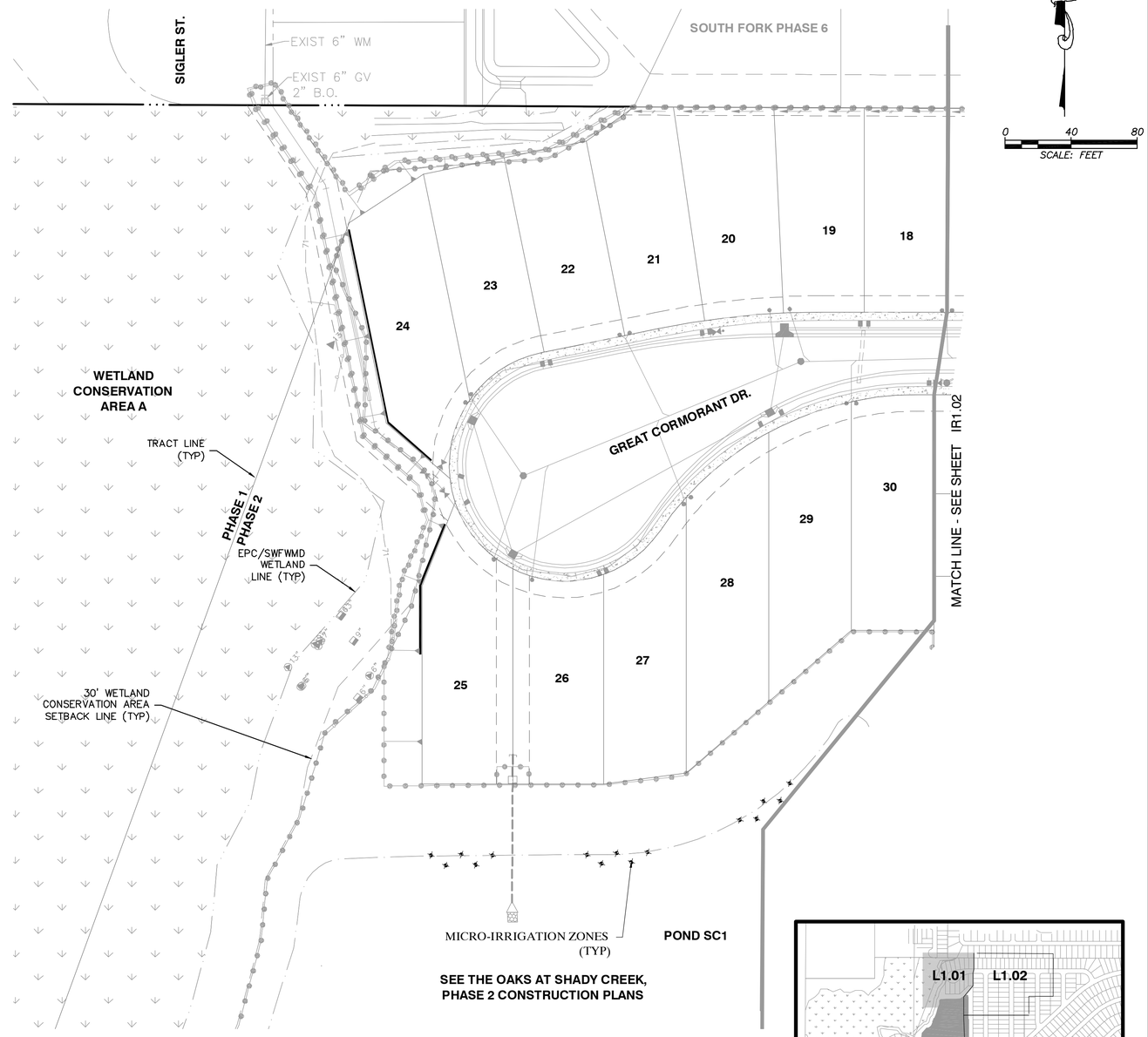

Q:\CIVIL\5163\905\000\Production\Drawings\PLN-CIP-01.dwg , February 11, 2015 10:43 AM, King Engineering Associate Inc.
© COPYRIGHT 2014 KING ENGINEERING ASSOCIATES, INC. DRAWINGS AND CONCEPTS MAY NOT BE USED OR REPRODUCED WITHOUT WRITTEN PERMISSION. CONSULT ITS INTENDED PURPOSE ONLY TO DOCUMENTS LABELED TO BE REPRODUCED AND DISCLAIMED IN COMPLIANCE WITH F.S. CHAPTER 119.

DESIGNED JLW	THE SIGNATURE OF THE QUALITY CONTROL OFFICER IN THIS SPACE INDICATES THAT ALL REQUIRED PERMITS HAVE BEEN OBTAINED AND THAT CONSTRUCTION IS AUTHORIZED TO COMMENCE.	King ENGINEERING ASSOCIATES, INC.	4921 Memorial Highway One Memorial Center, Suite 300 Tampa, Florida 33634 Phone 813 880-8881 Fax 813 880-8882 www.kingengineering.com Engineering License #2610
DRAWN JLW			
CHECKED TLT/AGK			
Q.C. AGK	MER 2/5/15		

THE OAKS AT SHADY CREEK, PHASE 2
FOR
LENNAR HOMES, LLC
4600 WEST CYPRESS ST. SUITE 200
TAMPA, FL. 34683
813-574-5653

CODE IRRIGATION PLAN

NO.	DATE	DESCRIPTION	APP'D BY

CLARK L. LOHMILLER
L.A. 6667167

JOB NO. 5163-905-000
DATE: 10-28-2014
SCALE: AS SHOWN
SHEET NO. IR1.01

HC FINAL SET
FEB. 11, 2015

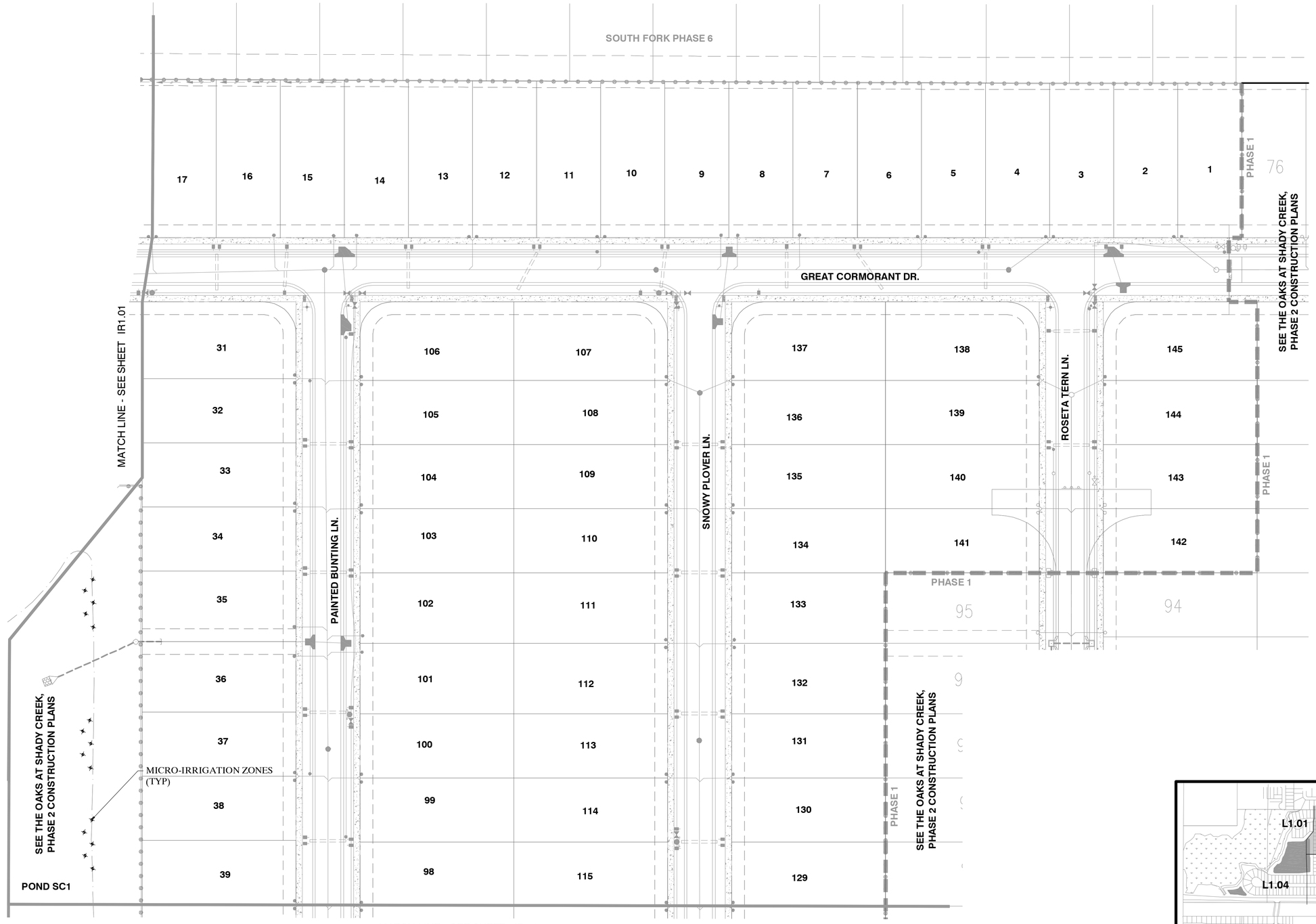

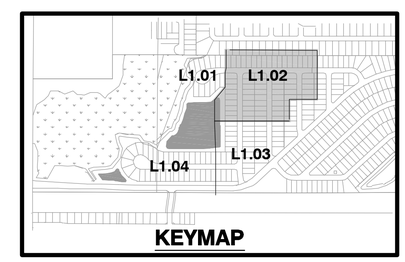

© COPYRIGHT 2014 KING ENGINEERING ASSOCIATES, INC. DRAWINGS AND CONCEPTS MAY NOT BE USED OR REPRODUCED WITHOUT WRITTEN PERMISSION. CONSULT KE FIRM IF UNSURE OR ESPECIALLY TO DOWNLOADED, LAYERED, OR REPRODUCED FILE DOCUMENTS IN COMPLIANCE WITH F.S. CHAPTER 119.

Q:\CIVIL\5163\905\000\Production\Drawings\PLN-CIP-02.dwg , February 11, 2015 10:44 AM, King Engineering Associate Inc.

DESIGNED JLW DRAWN JLW CHECKED TLT/AGK Q.C. LGK	THE SIGNATURE OF THE QUALITY CONTROL OFFICER IN THIS SPACE INDICATES THAT ALL REQUIRED PERMITS HAVE BEEN OBTAINED AND THAT CONSTRUCTION IS AUTHORIZED TO COMMENCE. MBR 2/5/15	King ENGINEERING ASSOCIATES, INC.	4921 Memorial Highway One Memorial Center, Suite 300 Tampa, Florida 33634 Phone 813 880-8881 Fax 813 880-8882 www.kingengineering.com Engineering License #2610	**THE OAKS AT SHADY CREEK, PHASE 2** FOR **LENNAR HOMES, LLC** 4600 WEST CYPRESS ST. SUITE 200 TAMPA, FL. 34683 813-574-5653	**CODE IRRIGATION PLAN**

NO.	DATE	DESCRIPTION	APP'D BY

CLARK L. LOHMILLER
L.A. 6667167

JOB NO. 5163-905-000
DATE: 10-28-2014
SCALE: AS SHOWN
SHEET NO. IR1.02
HC FINAL SET
FEB. 11, 2015

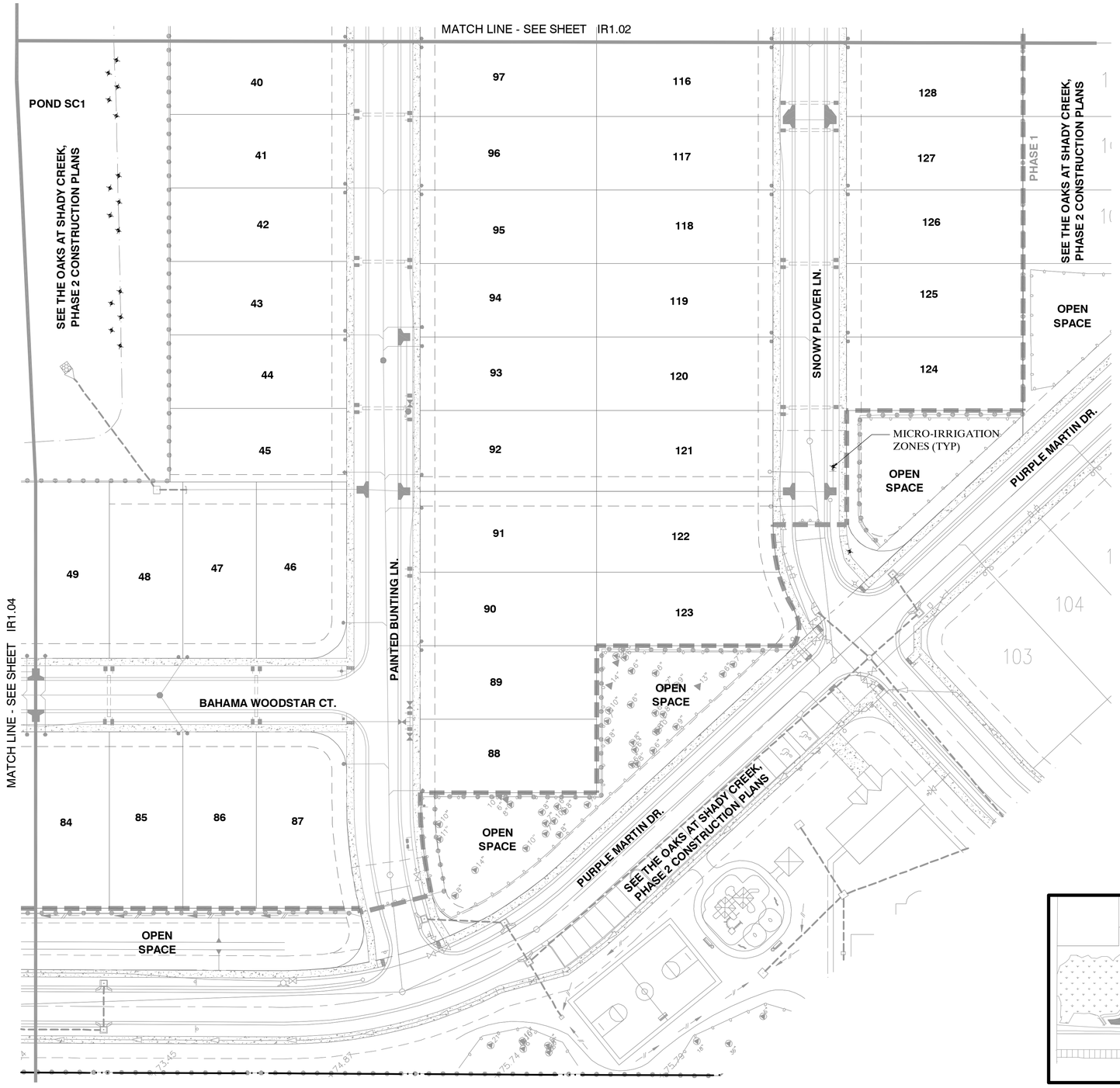

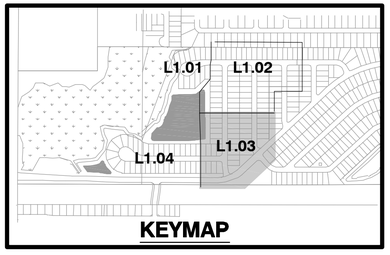

Q:\CIVIL\5163905\000\Production\Drawings\PLN-CIP-03.dwg , February 11, 2015 10:45 AM , King Engineering Associate Inc.
© COPYRIGHT 2014 KING ENGINEERING ASSOCIATES, INC. DRAWINGS AND CONCEPTS MAY NOT BE USED OR REPRODUCED WITHOUT WRITTEN PERMISSION
CONSULT KE HEREBY WAIVES ESPECIALLY TO GOVERNMENTAL AGENCIES TO REPRODUCE THIS DOCUMENT IN COMPLIANCE WITH F.S. CHAPTER 119.

DESIGNED JLW
DRAWN JLW
CHECKED TLT/AGK
Q.C. LGK MBR 2/5/15

THE SIGNATURE OF THE QUALITY CONTROL OFFICER IN THIS SPACE INDICATES THAT ALL REQUIRED PERMITS HAVE BEEN OBTAINED AND THAT CONSTRUCTION IS AUTHORIZED TO COMMENCE.

King ENGINEERING ASSOCIATES, INC.
4921 Memorial Highway
One Memorial Center, Suite 300
Tampa, Florida 33634
Phone 813 880-8881
Fax 813 880-8882
www.kingengineering.com
Engineering License #2610

THE OAKS AT SHADY CREEK, PHASE 2

FOR

LENNAR HOMES, LLC
4600 WEST CYPRESS ST. SUITE 200
TAMPA, FL. 34683
813-574-5653

CODE IRRIGATION PLAN

NO.	DATE	DESCRIPTION	APP'D BY

CLARK L. LOHMILLER
L.A. 6667167

JOB NO. 5163-905-000
DATE: 10-28-2014
SCALE: AS SHOWN

SHEET NO. IR1.03

HC FINAL SET
FEB. 11, 2015

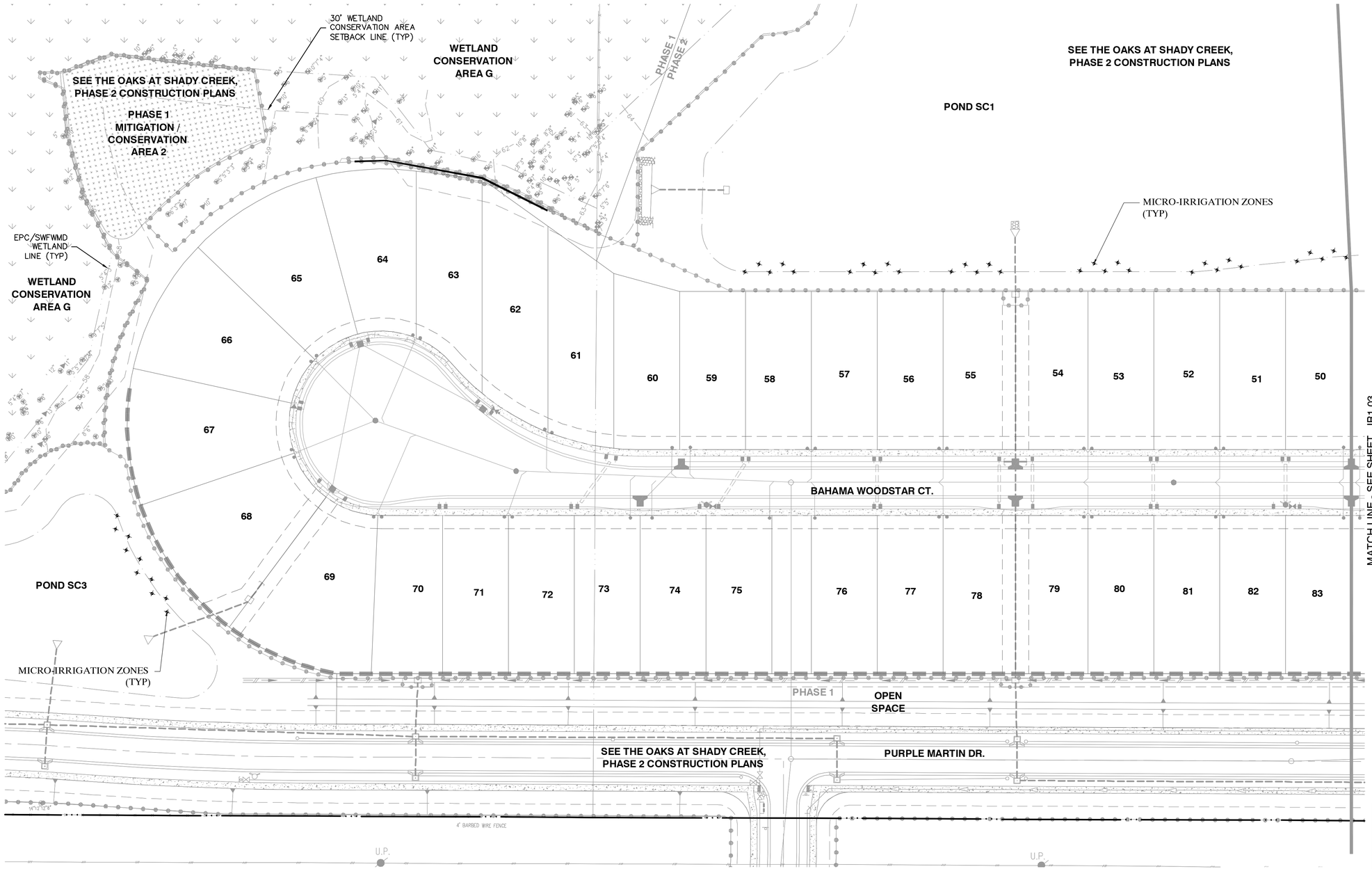

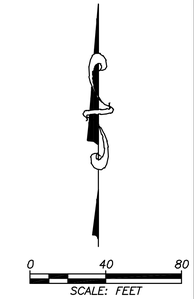

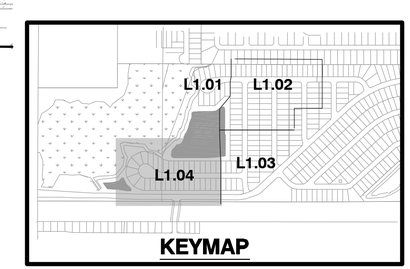

© COPYRIGHT 2014 KING ENGINEERING ASSOCIATES, INC. DRAWINGS AND CONCEPTS MAY NOT BE USED OR REPRODUCED WITHOUT WRITTEN PERMISSION.
CONSULT KING ENGINEERING ASSOCIATES, INC. FOR ADDITIONAL INFORMATION. THIS DOCUMENT IS COPYRIGHTED UNDER U.S. CHAPTER 11.

Q:\CIVIL\51163\905\000\Production\Drawings\PLN-CIP-04.dwg , February 11, 2015 10:45 AM , King Engineering Associate Inc.

DESIGNED JLW DRAWN JLW CHECKED TLT/AGK Q.C. LJK	THE SIGNATURE OF THE QUALITY CONTROL OFFICER IN THIS SPACE INDICATES THAT ALL REQUIRED PERMITS HAVE BEEN OBTAINED AND THAT CONSTRUCTION IS AUTHORIZED TO COMMENCE. MCR 2/5/15	King ENGINEERING ASSOCIATES, INC.	4921 Memorial Highway One Memorial Center, Suite 300 Tampa, Florida 33634 Phone 813 880-8881 Fax 813 880-8882 www.kingengineering.com Engineering License #2610	**THE OAKS AT SHADY CREEK, PHASE 2** FOR **LENNAR HOMES, LLC** 4600 WEST CYPRESS ST. SUITE 200 TAMPA, FL. 34683 813-574-5653	**CODE IRRIGATION PLAN**	NO. / DATE / DESCRIPTION / APP'D BY	CLARK L. LOHMILLER L.A. 6667167

JOB NO. 5163-905-000
DATE: 10-28-2014
SCALE: AS SHOWN
SHEET NO. IR1.04
HC FINAL SET
FEB. 11, 2015